Profile 20 Range

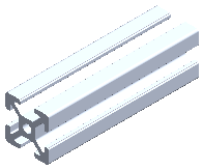

PG20 2020S

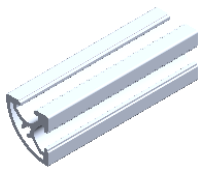

PG20 2020R90

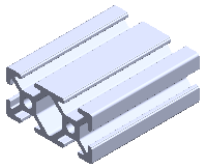

PG20 2040

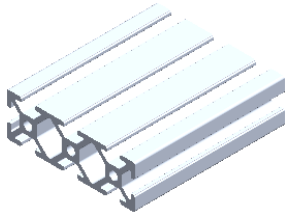

PG20 2060

H2,Globe Complex,Anjur Road,Ovali Village,Bhiwandi,Thane-421 302.Maharashtra,INDIA

Email : info@sica.in
Web : www.sica.in
Tel:+91 8097048513

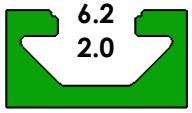

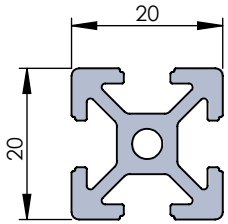

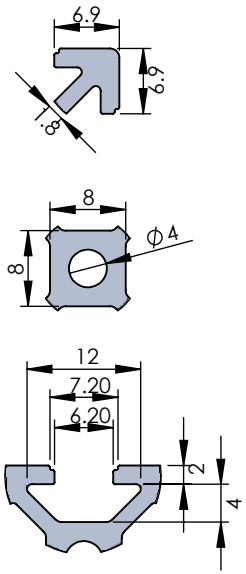

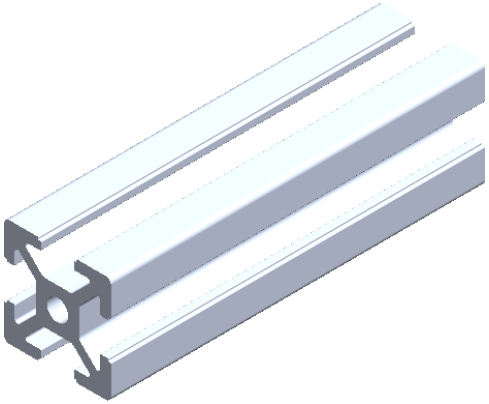

Profile group	20 Series	**Material**	Aluminium alloy	**Moment of inertia Lx**	0.74 cm^4
Part code	PG20 2020S	**Color**	Clear anodising	**Moment of inertia Ly**	0.74 cm^4
Description	PG20 20X20S with 4 slots	**Surface treatment**	15-17µm 300HX	**Moment of resistance Wx**	0.74 cm^3
				Moment of resistance Wy	0.74 cm^3
				Mass	0.50 kg/mtr

All Dimensions Are In mm

H2,Globe Complex,Anjur Road,Ovali Village,Bhiwandi,Thane-421 302.Maharashtra,INDIA

Email : info@sica.in
Web : www.sica.in
Tel:+91 8097048513

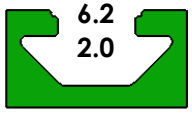

SICA

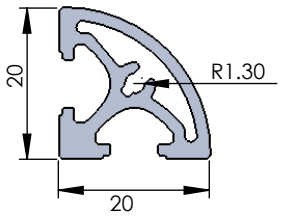

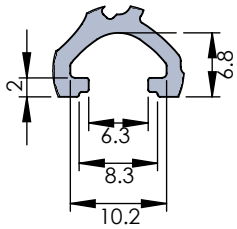

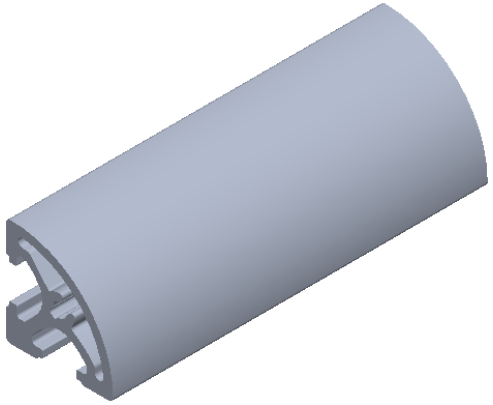

Profile group	20 Series	**Material**	Aluminium alloy	**Moment of inertia Lx**	0.54 cm^4
Part code	PG20 2020 R90	**Color**	Clear anodising	**Moment of inertia Ly**	0.74 cm^4
Description	PG20 20X20 R90	**Surface treatment**	15-17µm 300HX	**Moment of resistance Wx**	0.58 cm^3
				Moment of resistance Wy	0.74 cm^3
				Mass	0.41 kg/mtr

All Dimensions Are In mm

H2,Globe Complex,Anjur Road,Ovali Village,Bhiwandi,Thane-421 302.Maharashtra,INDIA

Email : info@sica.in
Web : www.sica.in
Tel:+91 8097048513

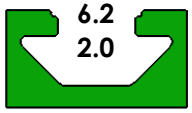

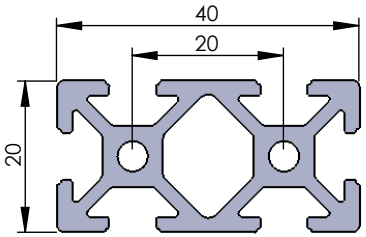

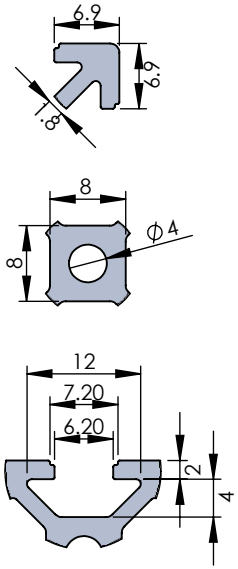

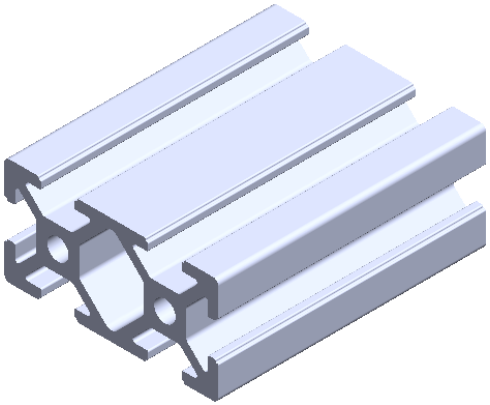

Profile group	20 Series	**Material**	Aluminium alloy	**Moment of inertia Lx**	1.37 cm^4
Part code	PG20 2040	**Color**	Clear anodising	**Moment of inertia Ly**	5.06 cm^4
Description	PG20 20X40 with 6 slots	**Surface treatment**	15-17µm 300HX	**Moment of resistance Wx**	1.37 cm^3
				Moment of resistance Wy	2.53 cm^3
				Mass	0.910 kg/mtr

All Dimensions Are In mm

H2,Globe Complex,Anjur Road,Ovali Village,Bhiwandi,Thane-421 302.Maharashtra,INDIA

Email : info@sica.in
Web : www.sica.in
Tel:+91 8097048513

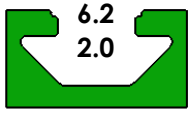

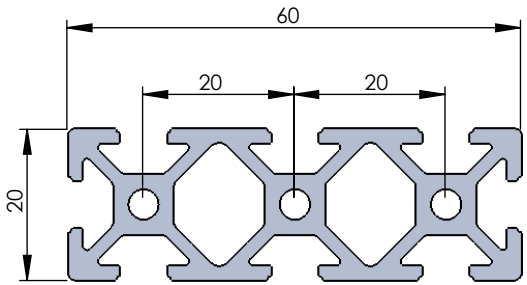

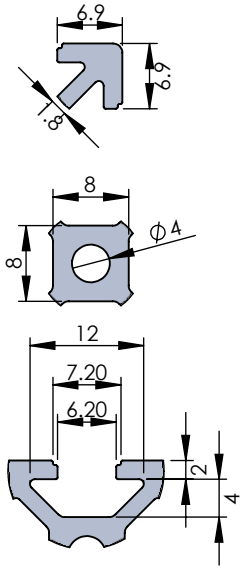

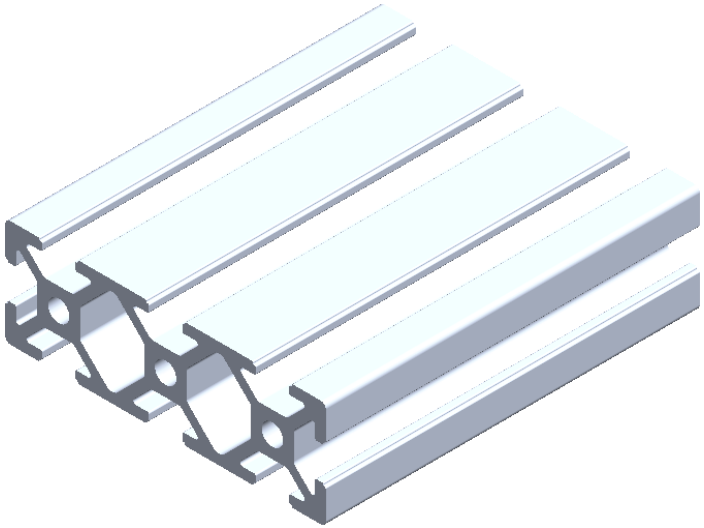

Profile group	20 Series	**Material**	Aluminium alloy	**Moment of inertia Lx**	2.00 cm^4
Part code	PG20 2060	**Color**	Clear anodising	**Moment of inertia Ly**	15.83 cm^4
Description	PG20 20X60 with 8 slots	**Surface treatment**	15-17µm 300HX	**Moment of resistance Wx**	2.00 cm^3
				Moment of resistance Wy	5.27 cm^3
				Mass	1.32 kg/mtr

All Dimensions Are In mm

H2,Globe Complex,Anjur Road,Ovali Village,Bhiwandi,Thane-421 302.Maharashtra,INDIA

Email : info@sica.in
Web : www.sica.in
Tel:+91 8097048513

SICA

Profile 30 Range

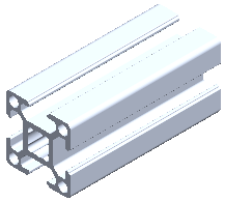

PG30 3030H

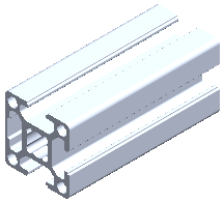

PG30 3030OSC

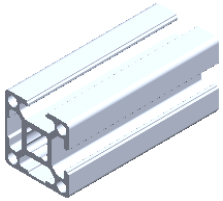

PG30 3030 2SSC

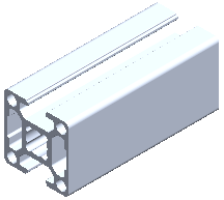

PG30 30302OSC

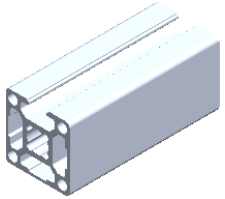

PG30 30303SC

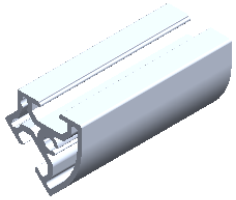

PG30 3030R45

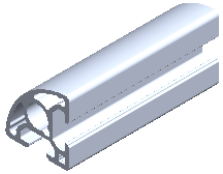

PG30 3030R90

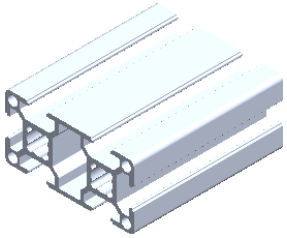

PG30 3060

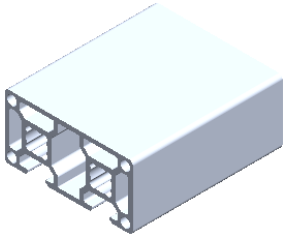

PG30 30603SC

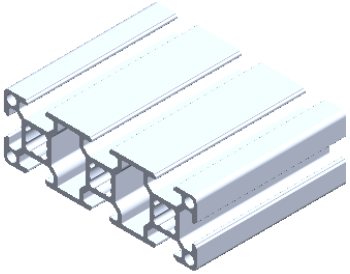

PG30 3090

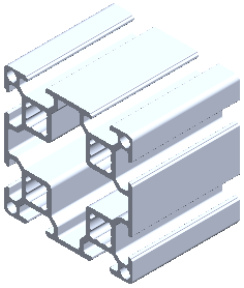

PG30 6060

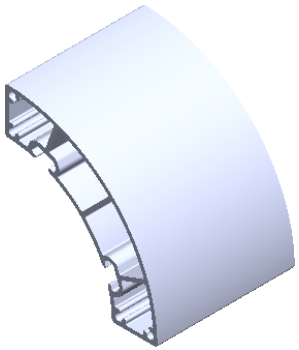

PG30 30R100

H2,Globe Complex,Anjur Road,Ovali Village,Bhiwandi,Thane-421 302.Maharashtra,INDIA

Email : info@sica.in
Web : www.sica.in
Tel:+91 8097048513

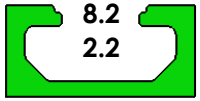

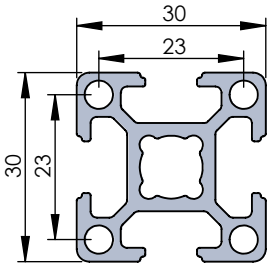

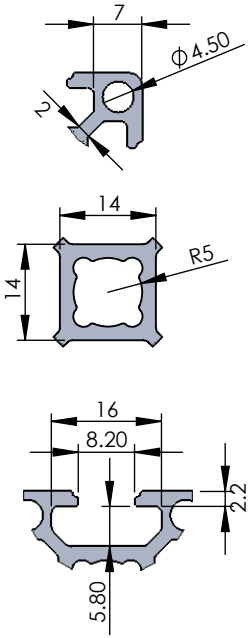

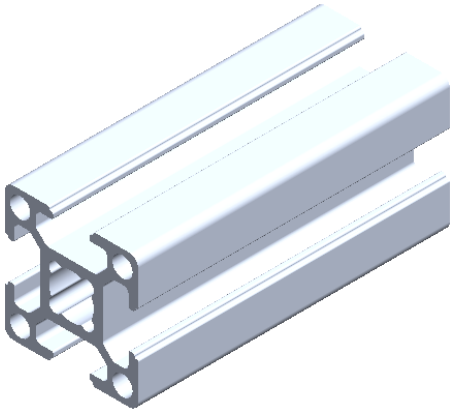

Profile group	30 Series	**Material**	Aluminium alloy	**Moment of inertia Lx**	2.86 cm^4
Part code	PG30 3030H	**Color**	Clear anodising	**Moment of inertia Ly**	2.86 cm^4
Description	PG30 30X30 with 4 slots	**Surface treatment**	15-17µm 300HX	**Moment of resistance Wx**	1.91 cm^3
				Moment of resistance Wy	1.91 cm^3
				Mass	0.85 kg/mtr

All Dimensions Are In mm

H2,Globe Complex,Anjur Road,Ovali Village,Bhiwandi,Thane-421 302.Maharashtra,INDIA

Email : info@sica.in
Web : www.sica.in
Tel:+91 8097048513

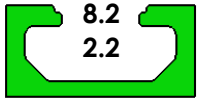

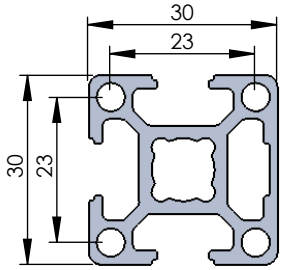

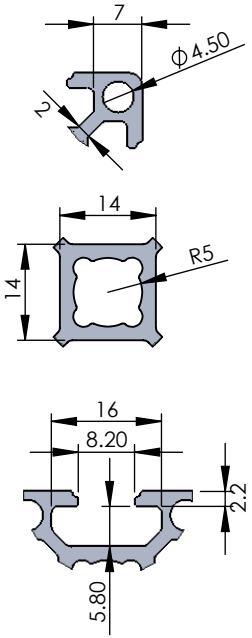

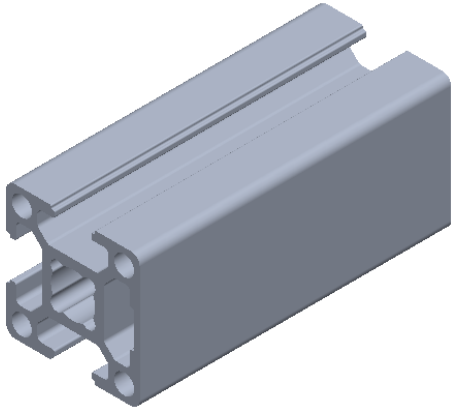

Profile group	30 Series	**Material**	Aluminium alloy	**Moment of inertia Lx**	3.00 cm^4
Part code	PG30 3030 OSC	**Color**	Clear anodising	**Moment of inertia Ly**	2.90 cm^4
Description	PG30 30X30 One side closed	**Surface treatment**	15-17µm 300HX	**Moment of resistance Wx**	2.00 cm^3
				Moment of resistance Wy	1.90 cm^3
				Mass	0.88 kg/mtr

All Dimensions Are In mm

H2,Globe Complex,Anjur Road,Ovali Village,Bhiwandi,Thane-421 302.Maharashtra,INDIA

Email : info@sica.in
Web : www.sica.in
Tel:+91 8097048513

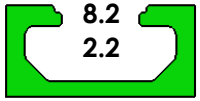

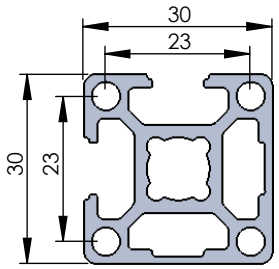

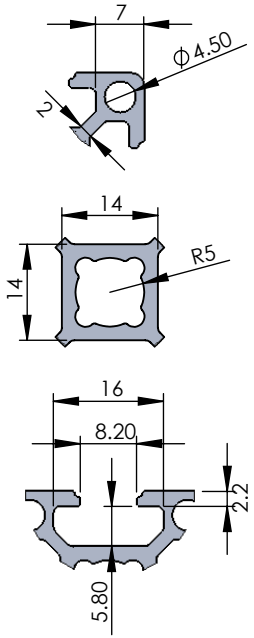

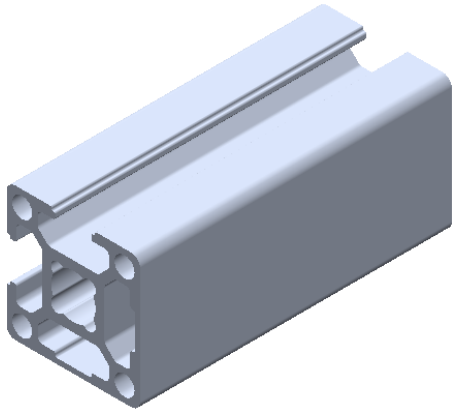

Profile group	30 Series	**Material**	Aluminium alloy	**Moment of inertia Lx**	2.90 cm^4
Part code	PG30 3030 2SSC	**Color**	Clear anodising	**Moment of inertia Ly**	2.90 cm^4
Description	PG30 30X30 Two adjacent side closed	**Surface treatment**	15-17µm 300HX	**Moment of resistance Wx**	2.00 cm^3
				Moment of resistance Wy	2.00 cm^3
				Mass	0.91 kg/mtr

All Dimensions Are In mm

H2,Globe Complex,Anjur Road,Ovali Village,Bhiwandi,Thane-421 302.Maharashtra,INDIA

Email : info@sica.in
Web : www.sica.in
Tel:+91 8097048513

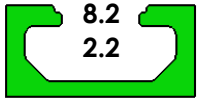

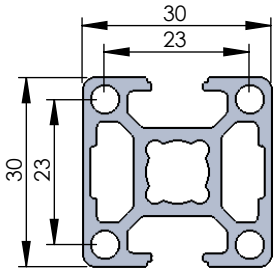

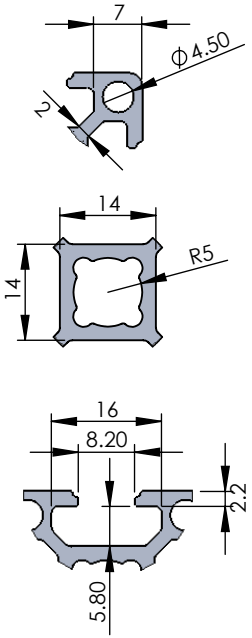

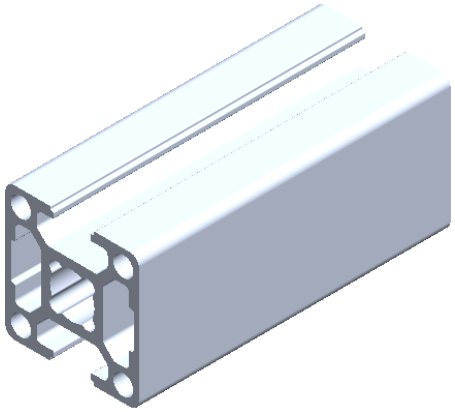

Profile group	30 Series	**Material**	Aluminium alloy	**Moment of inertia Lx**	2.80 cm^4
Part code	PG30 3030 2OSC	**Color**	Clear anodising	**Moment of inertia Ly**	3.20 cm^4
Description	PG30 30X30 Two opposite side closed	**Surface treatment**	15-17µm 300HX	**Moment of resistance Wx**	1.90 cm^3
				Moment of resistance Wy	2.10 cm^3
				Mass	0.91 kg/mtr

All Dimensions Are In mm

H2,Globe Complex,Anjur Road,Ovali Village,Bhiwandi,Thane-421 302.Maharashtra,INDIA

Email : info@sica.in
Web : www.sica.in
Tel:+91 8097048513

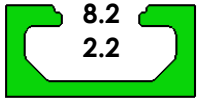

SICA

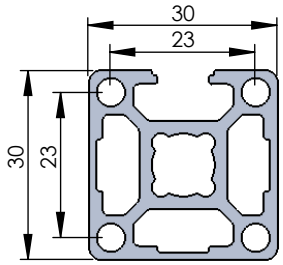

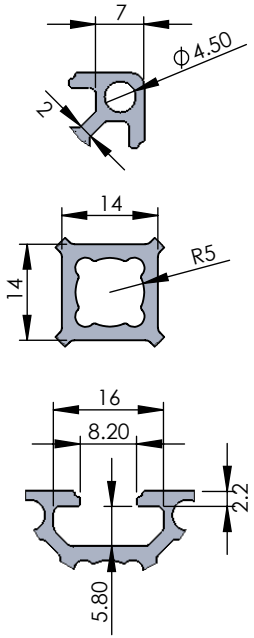

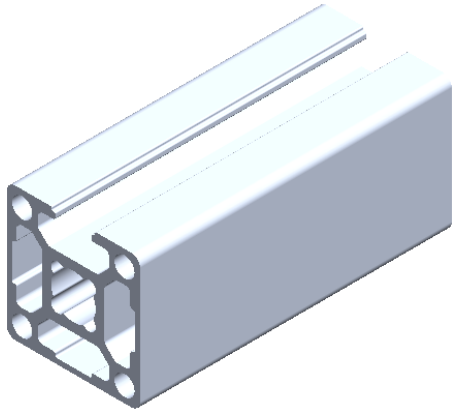

Profile group	30 Series	**Material**	Aluminium alloy	**Moment of inertia Lx**	3.10 cm^4
Part code	PG30 3030 3SC	**Color**	Clear anodising	**Moment of inertia Ly**	3.20 cm^4
Description	PG30 30X30 Three sides closed	**Surface treatment**	15-17µm 300HX	**Moment of resistance Wx**	2.00 cm^3
				Moment of resistance Wy	2.00 cm^3
				Mass	0.94 kg/mtr

All Dimensions Are In mm

H2,Globe Complex,Anjur Road,Ovali Village,Bhiwandi,Thane-421 302.Maharashtra,INDIA

Email : info@sica.in
Web : www.sica.in
Tel:+91 8097048513

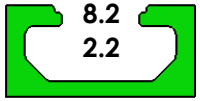

SICA

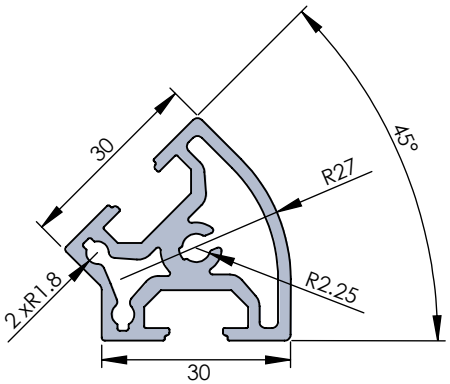

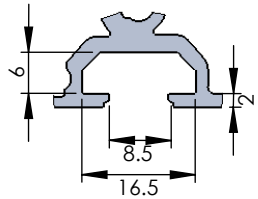

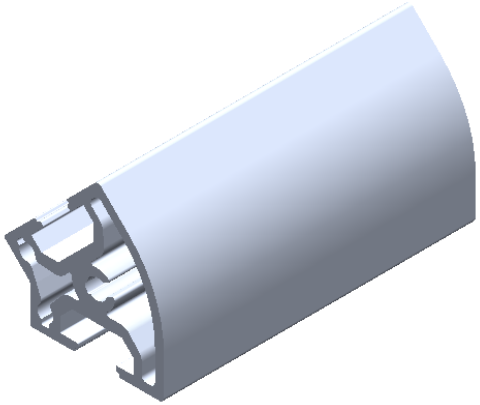

Profile group	30 Series	**Material**	Aluminium alloy	**Moment of inertia Lx**	2.60 cm^4
Part code	PG30 3030 R45	**Color**	Clear anodising	**Moment of inertia Ly**	1.80 cm^4
Description	PG30 30X30 R45	**Surface treatment**	15-17µm 300HX	**Moment of resistance Wx**	1.20 cm^3
				Moment of resistance Wy	0.90 cm^3
				Mass	0.96 kg/mtr

All Dimensions Are In mm

H2,Globe Complex,Anjur Road,Ovali Village,Bhiwandi,Thane-421 302.Maharashtra,INDIA

Email : info@sica.in
Web : www.sica.in
Tel:+91 8097048513

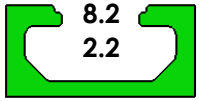

SICA

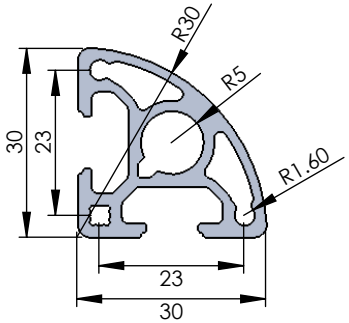

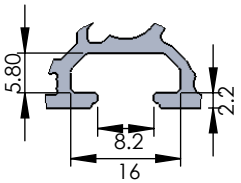

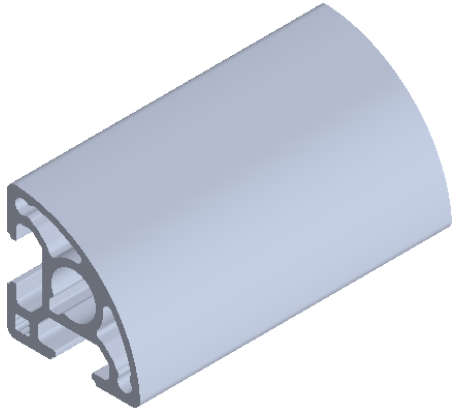

Profile group	30 Series
Part code	PG30 3030 R90
Description	PG30 30X30 R90

Material	Aluminium alloy
Color	Clear anodising
Surface treatment	15-17µm 300HX

Moment of inertia Lx	2.50 cm^4
Moment of inertia Ly	1.60 cm^4
Moment of resistance Wx	1.20 cm^3
Moment of resistance Wy	0.9 cm^3
Mass	0.77 kg/mtr

All Dimensions Are In mm

H2,Globe Complex,Anjur Road,Ovali Village,Bhiwandi,Thane-421 302.Maharashtra,INDIA

Email : info@sica.in
Web : www.sica.in
Tel:+91 8097048513

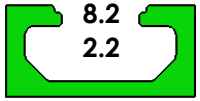

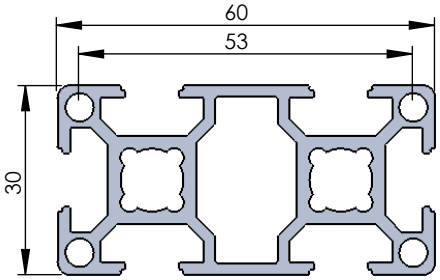

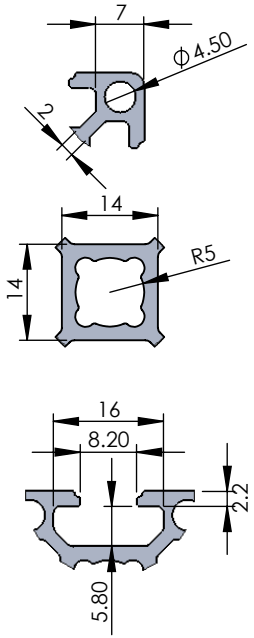

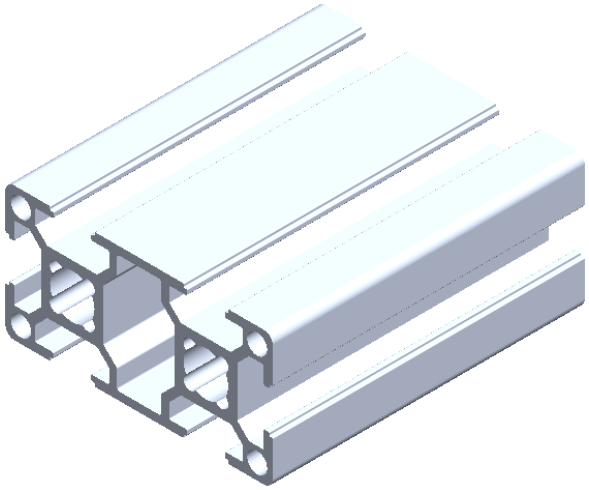

Profile group	30 Series	**Material**	Aluminium alloy	**Moment of inertia Lx**	5.27 cm^4
Part code	PG30 3060	**Color**	Clear anodising	**Moment of inertia Ly**	1.99 cm^4
Description	PG30 30X60 with 6 slots	**Surface treatment**	15-17µm 300HX	**Moment of resistance Wx**	3.51 cm^3
				Moment of resistance Wy	6.64 cm^3
				Mass	1.44 kg/mtr

All Dimensions Are In mm

H2,Globe Complex,Anjur Road,Ovali Village,Bhiwandi,Thane-421 302.Maharashtra,INDIA

Email : info@sica.in
Web : www.sica.in
Tel:+91 8097048513

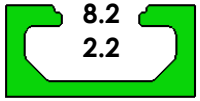

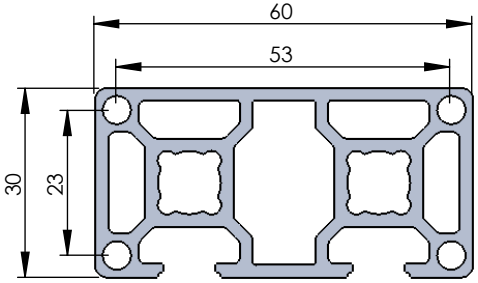

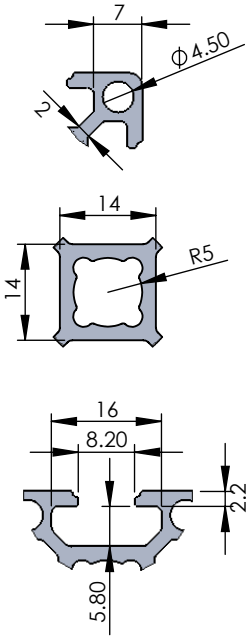

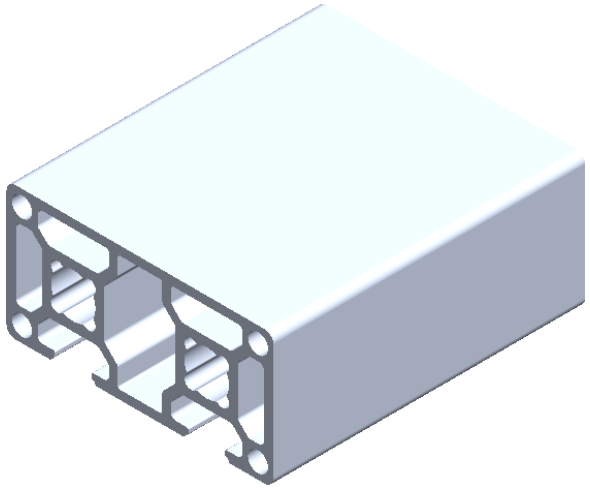

Profile group	30 Series	**Material**	Aluminium alloy	**Moment of inertia Lx**	6.10 cm^4
Part code	PG30 3060 3SC	**Color**	Clear anodising	**Moment of inertia Ly**	22.10 cm^4
Description	PG30 30X60 Three sides closed	**Surface treatment**	15-17µm 300HX	**Moment of resistance Wx**	3.80 cm^3
				Moment of resistance Wy	2.00 cm^3
				Mass	1.72 kg/mtr

All Dimensions Are In mm

H2,Globe Complex,Anjur Road,Ovali Village,Bhiwandi,Thane-421 302.Maharashtra,INDIA

Email : info@sica.in
Web : www.sica.in
Tel:+91 8097048513

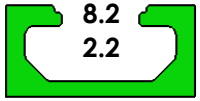

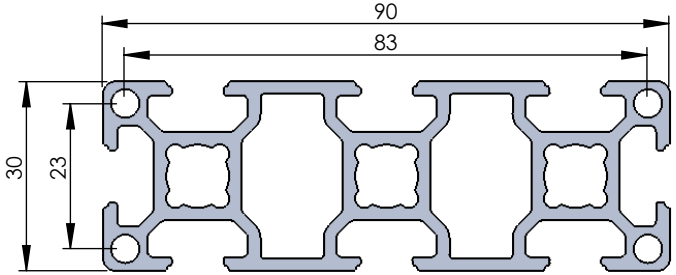

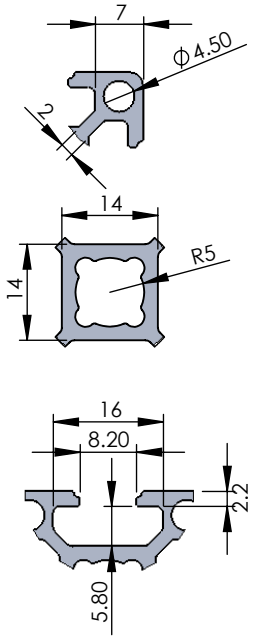

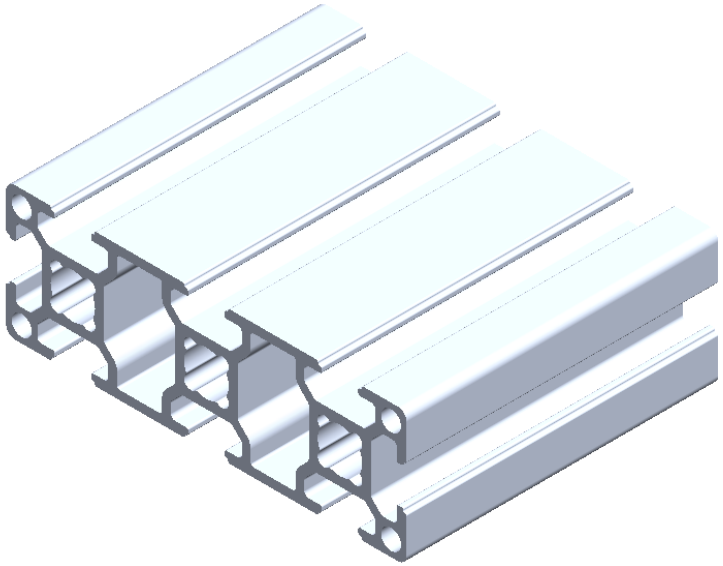

Profile group	30 Series	**Material**	Aluminium alloy	**Moment of inertia Lx**	07.68 cm^4
Part code	PG30 3090	**Color**	Clear anodising	**Moment of inertia Ly**	62.00 cm^4
Description	PG30 30X90 with 8 slots	**Surface treatment**	15-17µm 300HX	**Moment of resistance Wx**	05.12 cm^3
				Moment of resistance Wy	13.78 cm^3
				Mass	2.2 kg/mtr

All Dimensions Are In mm

H2,Globe Complex,Anjur Road,Ovali Village,Bhiwandi,Thane-421 302.Maharashtra,INDIA

Email : info@sica.in
Web : www.sica.in
Tel:+91 8097048513

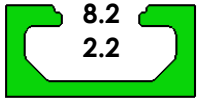

SICA

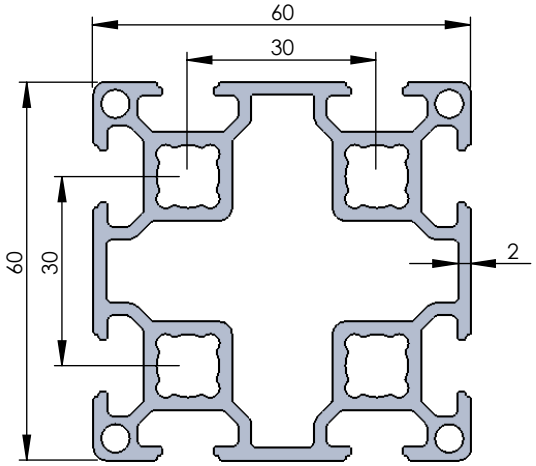

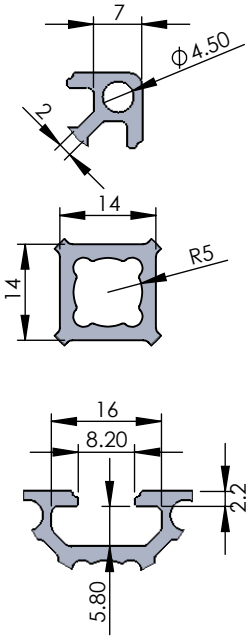

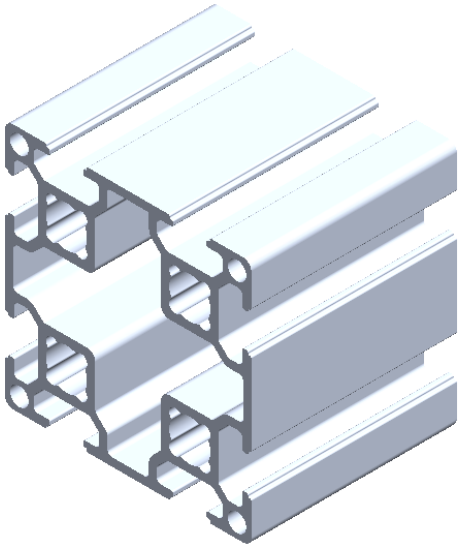

Profile group	30 Series	**Material**	Aluminium alloy	**Moment of inertia Lx**	35.32 cm^4
Part code	PG30 6060	**Color**	Clear anodising	**Moment of inertia Ly**	35.32 cm^4
Description	PG30 60X60 with 8 slots	**Surface treatment**	15-17µm 300HX	**Moment of resistance Wx**	11.77 cm^3
				Moment of resistance Wy	11.77 cm^3
				Mass	2.46 kg/mtr

All Dimensions Are In mm

H2,Globe Complex,Anjur Road,Ovali Village,Bhiwandi,Thane-421 302.Maharashtra,INDIA

Email : info@sica.in
Web : www.sica.in
Tel:+91 8097048513

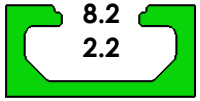

SICA

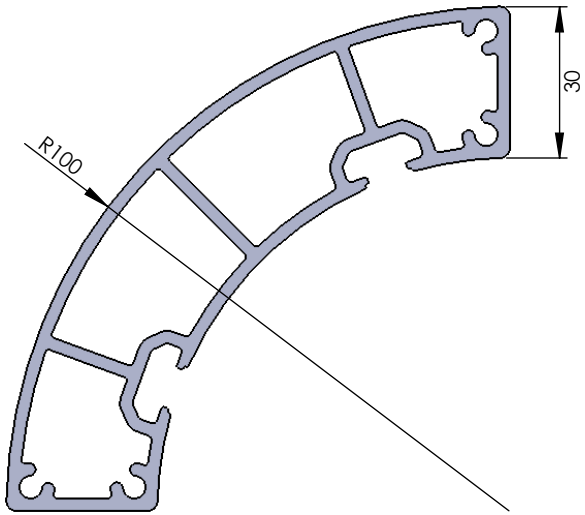

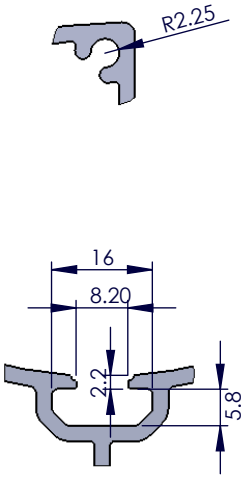

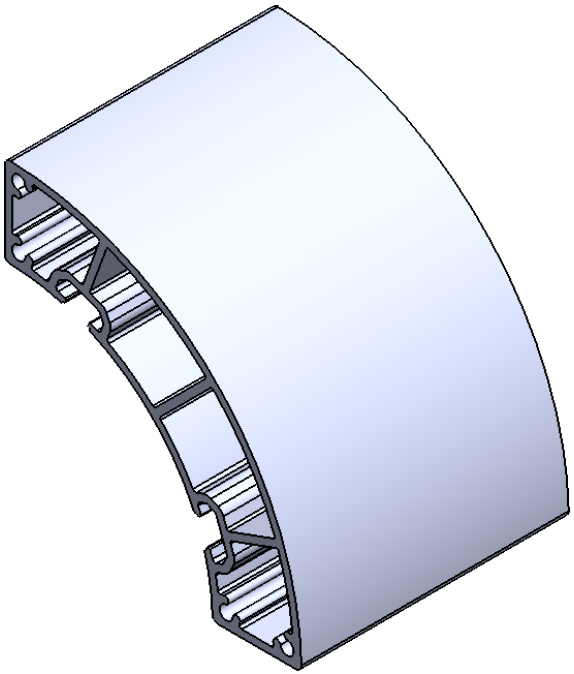

Profile group	30 Series	**Material**	Aluminium alloy	**Moment of inertia Lx**	----
Part code	PG30 30R100	**Color**	Clear anodising	**Moment of inertia Ly**	----
Description	PG30 30R100 with 2 slots	**Surface treatment**	15-17µm 300HX	**Moment of resistance Wx**	----
				Moment of resistance Wy	----
				Mass	2.98 kg/mtr

All Dimensions Are In mm

H2,Globe Complex,Anjur Road,Ovali Village,Bhiwandi,Thane-421 302.Maharashtra,INDIA

Email : info@sica.in
Web : www.sica.in
Tel:+91 8097048513

SICA

Profile 40 Range

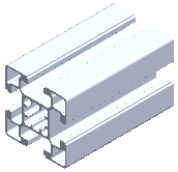

PG40 4040S

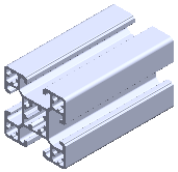

PG40 4040M

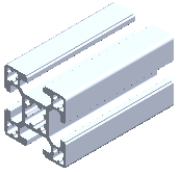

PG40 4040H

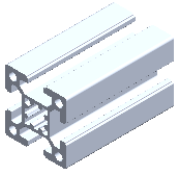

PG40 4040XH

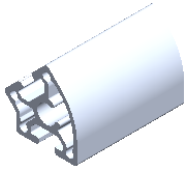

PG40 4040R45

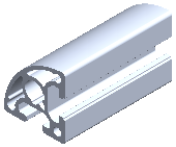

PG40 4040R90

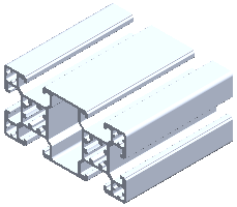

PG40 4080M

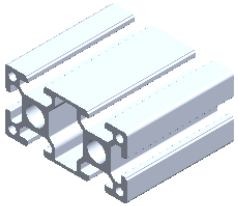

PG40 4080H

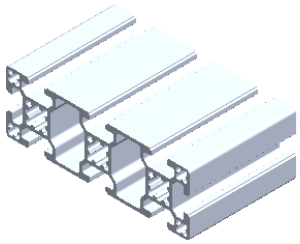

PG40 40120

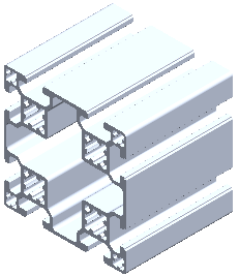

PG40 8080M

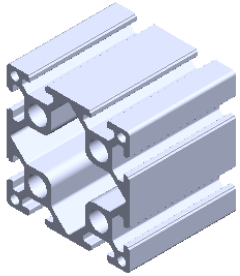

PG40 8080H

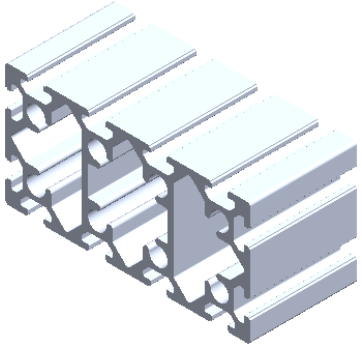

PG40 80160

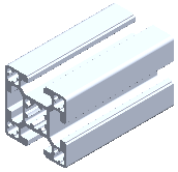

PG40 4040OSC

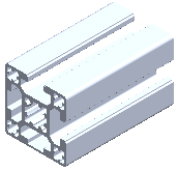

PG40 40402SSC

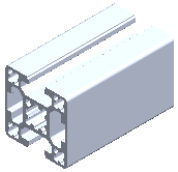

PG40 40402OSC

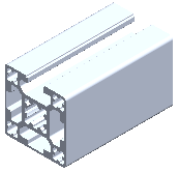

PG40 40403SC

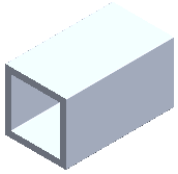

4040 Hollow

H2,Globe Complex,Anjur Road,Ovali Village,Bhiwandi,Thane-421 302.Maharashtra,INDIA

Email : info@sica.in
Web : www.sica.in
Tel:+91 8097048513

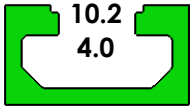

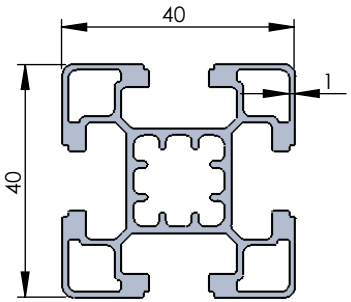

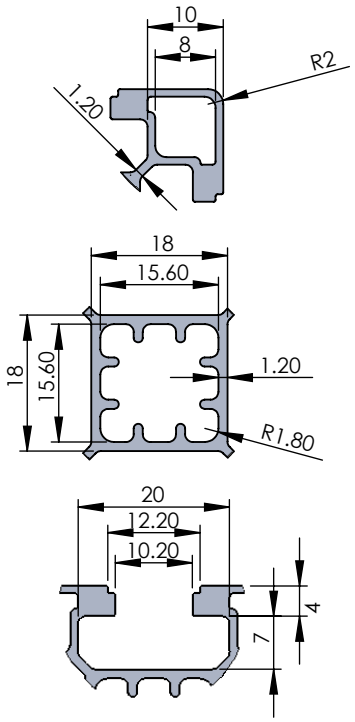

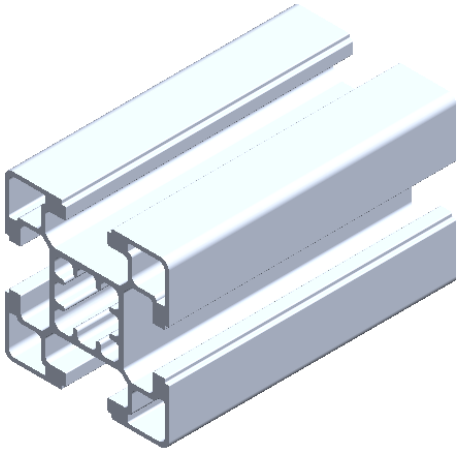

Profile group	40 Series	**Material**	Aluminium alloy	**Moment of inertia Lx**	7.53 cm^4
Part code	PG40 4040S	**Color**	Clear anodising	**Moment of inertia Ly**	7.53 cm^4
Description	PG40 40X40S with 4 slots	**Surface treatment**	15-17µm 300HX	**Moment of resistance Wx**	4.21 cm^3
				Moment of resistance Wy	4.21 cm^3
				Mass	1.072 kg/mtr

All Dimensions Are In mm

H2,Globe Complex,Anjur Road,Ovali Village,Bhiwandi,Thane-421 302.Maharashtra,INDIA

Email : info@sica.in
Web : www.sica.in
Tel:+91 8097048513

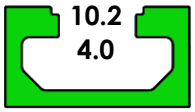

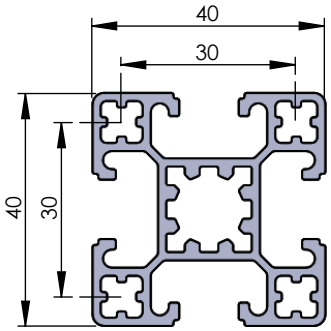

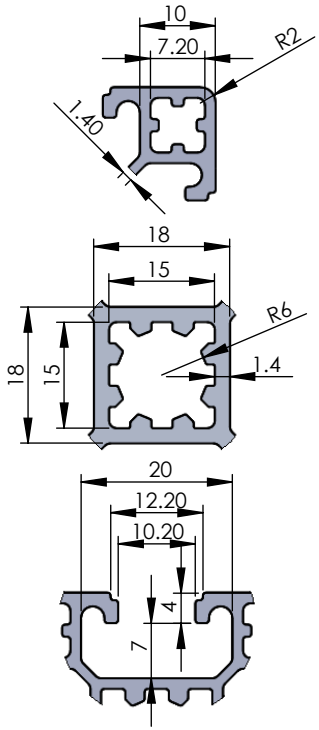

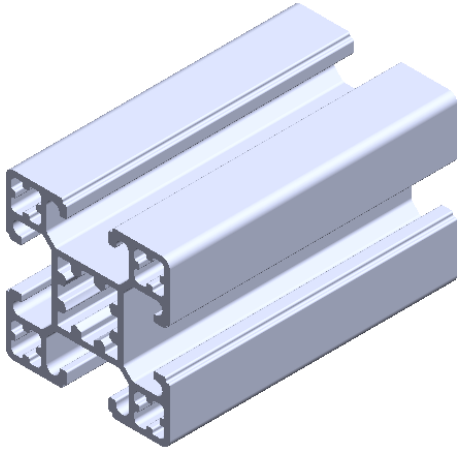

Profile group	40 Series	**Material**	Aluminium alloy	**Moment of inertia Lx**	8.62 cm^4
Part code	PG40 4040M	**Color**	Clear anodising	**Moment of inertia Ly**	8.62 cm^4
Description	PG40 40X40M with 4 slots	**Surface treatment**	15-17µm 300HX	**Moment of resistance Wx**	4.31 cm^3
				Moment of resistance Wy	4.31 cm^3
				Mass	1.26 kg/mtr

All Dimensions Are In mm

H2,Globe Complex,Anjur Road,Ovali Village,Bhiwandi,Thane-421 302.Maharashtra,INDIA

Email : info@sica.in
Web : www.sica.in
Tel:+91 8097048513

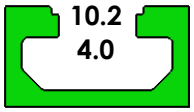

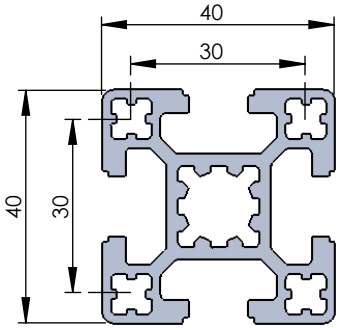

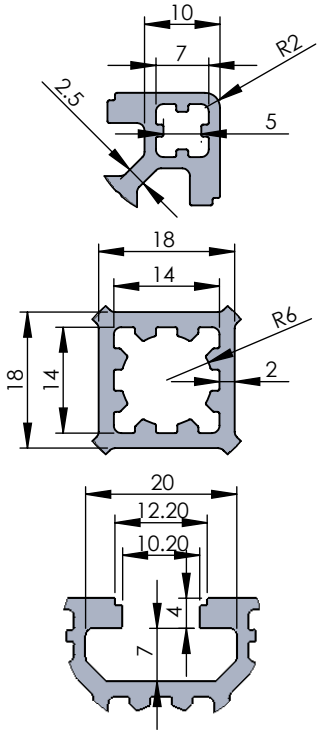

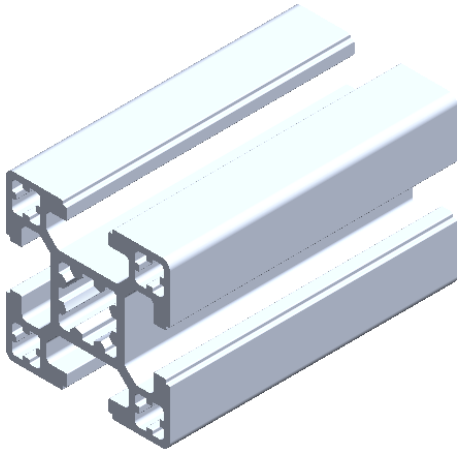

Profile group	40 Series	**Material**	Aluminium alloy	**Moment of inertia Lx**	9.09 cm^4
Part code	PG40 4040H	**Color**	Clear anodising	**Moment of inertia Ly**	9.09 cm^4
Description	PG40 40X40H with 4 slots	**Surface treatment**	15-17µm 300HX	**Moment of resistance Wx**	4.54 cm^3
				Moment of resistance Wy	4.54 cm^3
				Mass	1.53 kg/mtr

All Dimensions Are In mm

H2,Globe Complex,Anjur Road,Ovali Village,Bhiwandi,Thane-421 302.Maharashtra,INDIA

Email : info@sica.in
Web : www.sica.in
Tel:+91 8097048513

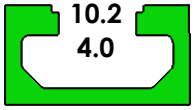

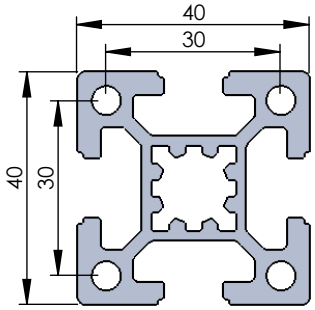

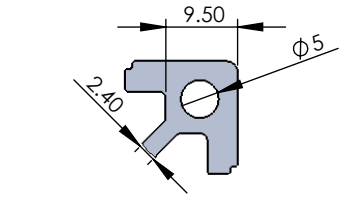

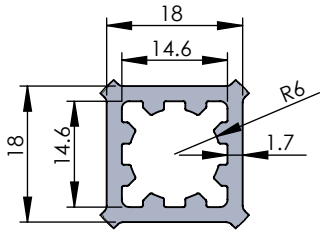

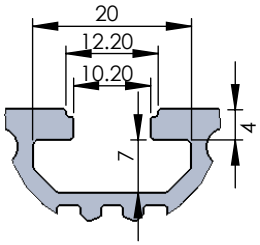

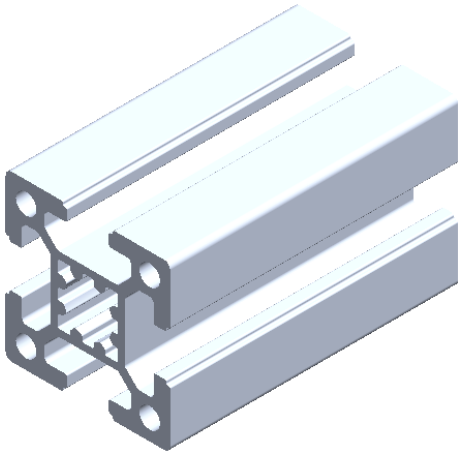

Profile group	40 Series	**Material**	Aluminium alloy	**Moment of inertia Lx**	10.30 cm^4
Part code	PG40 4040 XH	**Color**	Clear anodising	**Moment of inertia Ly**	10.30 cm^4
Description	PG40 40X40 XH with 4 slots	**Surface treatment**	15-17µm 300HX	**Moment of resistance Wx**	04.74 cm^3
				Moment of resistance Wy	04.74 cm^3
				Mass	1.70 kg/mtr

All Dimensions Are In mm

H2,Globe Complex,Anjur Road,Ovali Village,Bhiwandi,Thane-421 302.Maharashtra,INDIA

Email : info@sica.in
Web : www.sica.in
Tel:+91 8097048513

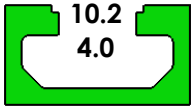

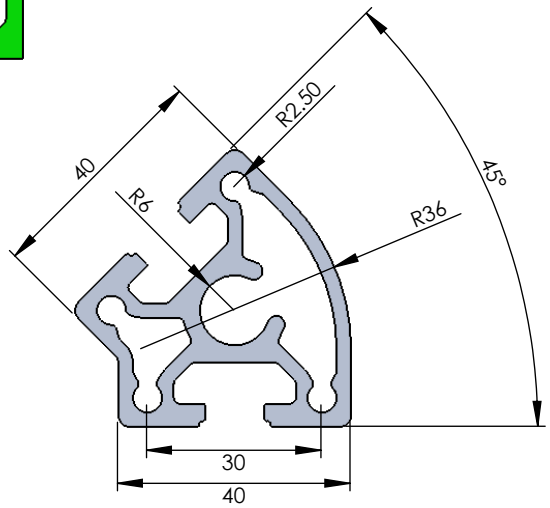

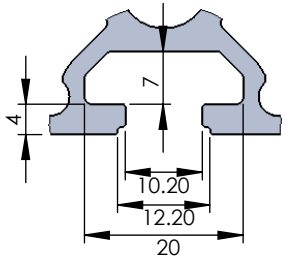

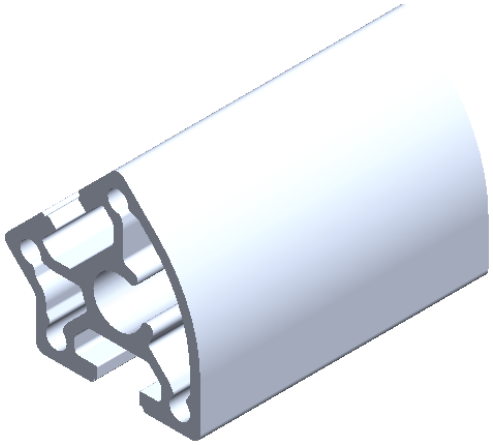

Profile group	40 Series	**Material**	Aluminium alloy	**Moment of inertia Lx**	8.30 cm^4
Part code	PG40 4040 R45	**Color**	Clear anodising	**Moment of inertia Ly**	4.60 cm^4
Description	PG40 40X40 R45	**Surface treatment**	15-17µm 300HX	**Moment of resistance Wx**	2.80 cm^3
				Moment of resistance Wy	1.90 cm^3
				Mass	1.7 kg/mtr

All Dimensions Are In mm

H2,Globe Complex,Anjur Road,Ovali Village,Bhiwandi,Thane-421 302.Maharashtra,INDIA

Email : info@sica.in
Web : www.sica.in
Tel:+91 8097048513

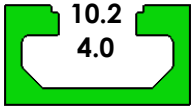

SICA

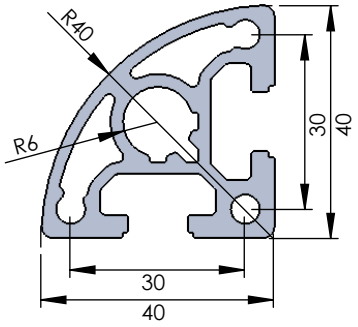

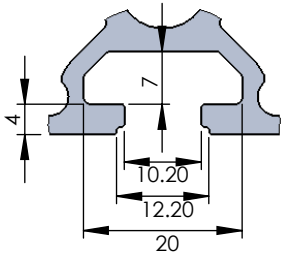

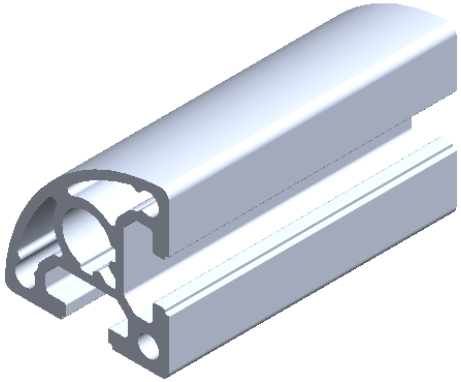

Profile group	40 Series	**Material**	Aluminium alloy	**Moment of inertia Lx**	8.30 cm^4
Part code	PG40 4040 R90	**Color**	Clear anodising	**Moment of inertia Ly**	4.80 cm^4
Description	PG40 40X40 R90	**Surface treatment**	15-17µm 300HX	**Moment of resistance Wx**	3.00 cm^3
				Moment of resistance Wy	1.90 cm^3
				Mass	1.43 kg/mtr

All Dimensions Are In mm

H2,Globe Complex,Anjur Road,Ovali Village,Bhiwandi,Thane-421 302.Maharashtra,INDIA

Email : info@sica.in
Web : www.sica.in
Tel:+91 8097048513

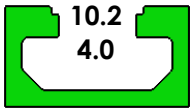

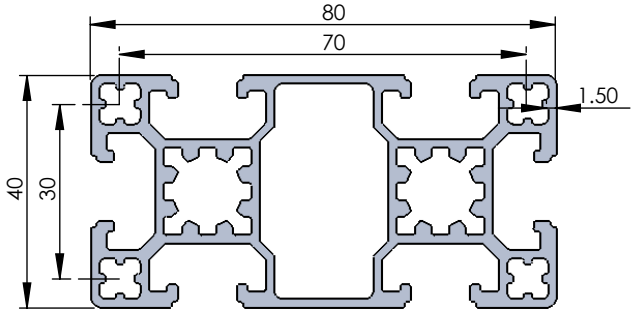

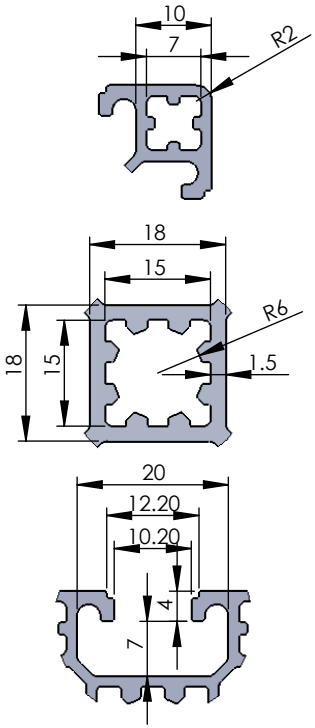

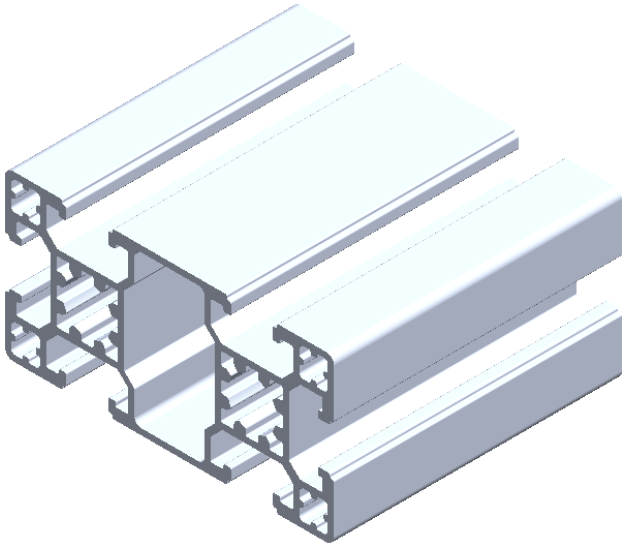

Profile group	40 Series	**Material**	Aluminium alloy	**Moment of inertia Lx**	15.75 cm^4
Part code	PG40 4080M	**Color**	Clear anodising	**Moment of inertia Ly**	59.05 cm^4
Description	PG40 40X80M with 6 slots	**Surface treatment**	15-17µm 300HX	**Moment of resistance Wx**	07.88 cm^3
				Moment of resistance Wy	14.76 cm^3
				Mass	2.29 kg/mtr

All Dimensions Are In mm

H2,Globe Complex,Anjur Road,Ovali Village,Bhiwandi,Thane-421 302.Maharashtra,INDIA

Email : info@sica.in
Web : www.sica.in
Tel:+91 8097048513

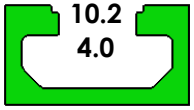

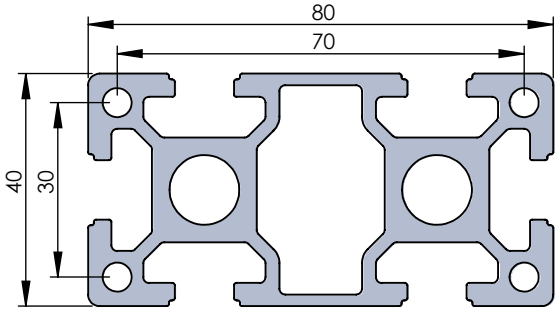

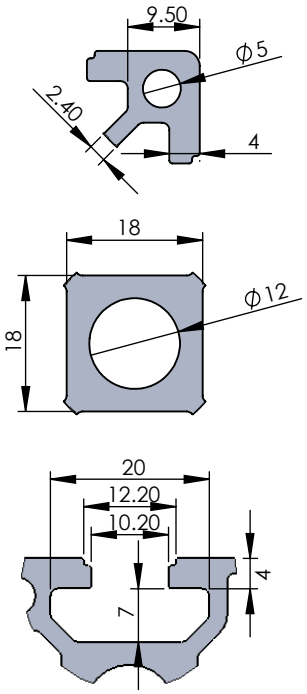

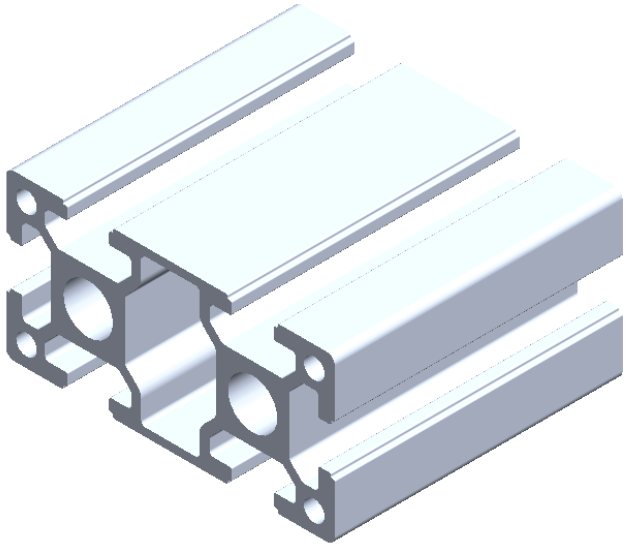

Profile group	40 Series	**Material**	Aluminium alloy	**Moment of inertia Lx**	22.21 cm^4
Part code	PG40 4080H	**Color**	Clear anodising	**Moment of inertia Ly**	80.82 cm^4
Description	PG40 40X80H with 6 slots	**Surface treatment**	15-17µm 300HX	**Moment of resistance Wx**	11.10 cm^3
				Moment of resistance Wy	20.20 cm^3
				Mass	3.14 kg/mtr

All Dimensions Are In mm

H2,Globe Complex,Anjur Road,Ovali Village,Bhiwandi,Thane-421 302.Maharashtra,INDIA

Email : info@sica.in
Web : www.sica.in
Tel:+91 8097048513

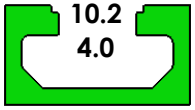

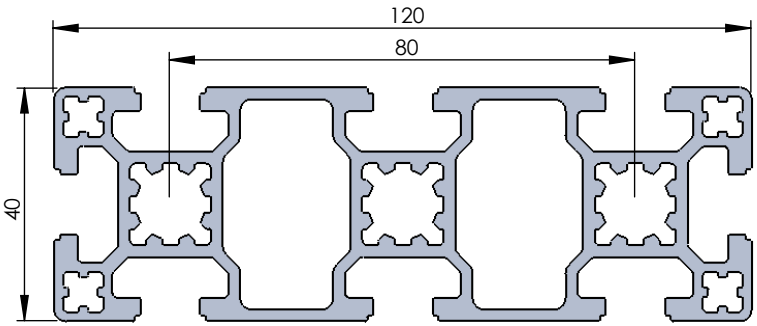

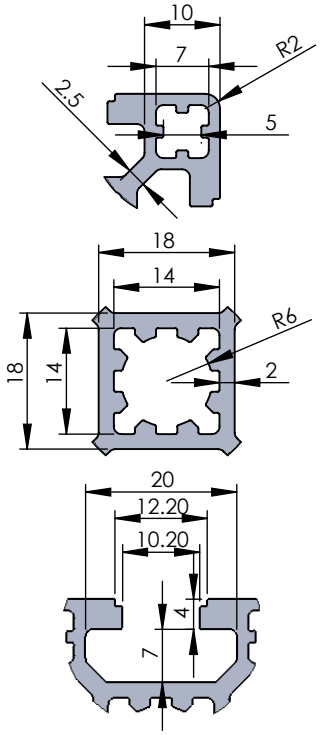

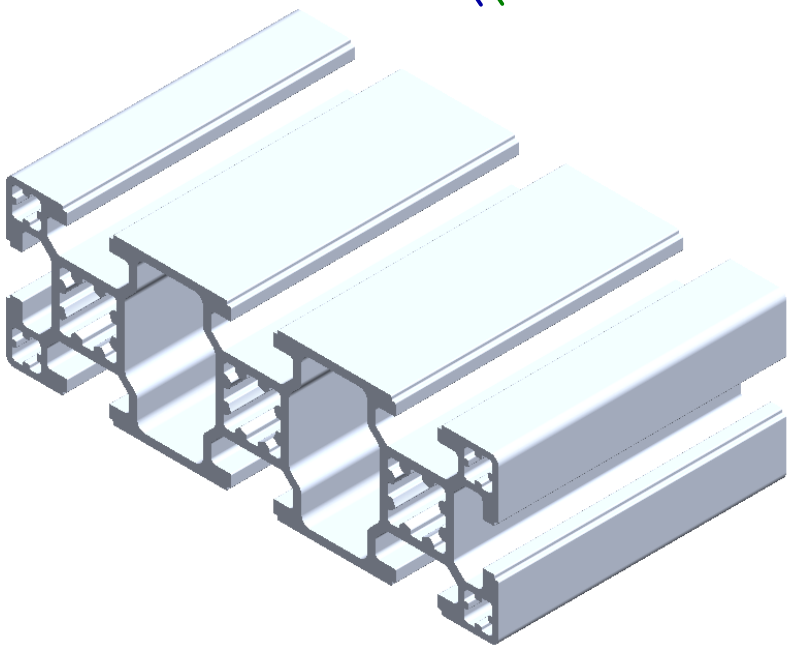

Profile group	40 Series	**Material**	Aluminium alloy	**Moment of inertia Lx**	24.10 cm^4
Part code	PG40 40120H	**Color**	Clear anodising	**Moment of inertia Ly**	194.77 cm^4
Description	PG40 40X120H with 8 slots	**Surface treatment**	15-17µm 300HX	**Moment of resistance Wx**	12.05cm^3
				Moment of resistance Wy	32.46 cm^3
				Mass	3.7 kg/mtr

All Dimensions Are In mm

H2,Globe Complex,Anjur Road,Ovali Village,Bhiwandi,Thane-421 302.Maharashtra,INDIA

Email : info@sica.in
Web : www.sica.in
Tel:+91 8097048513

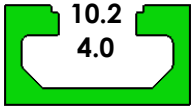

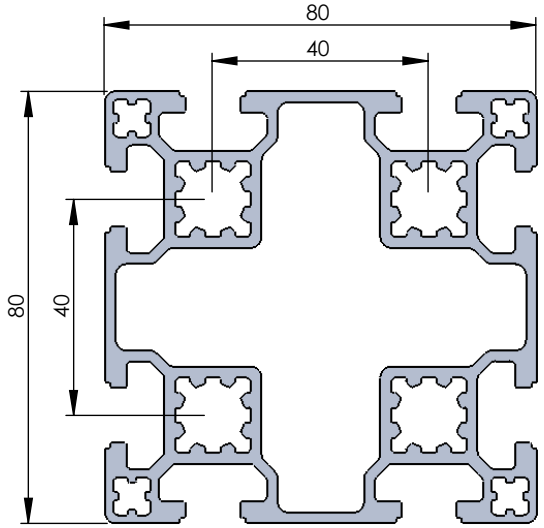

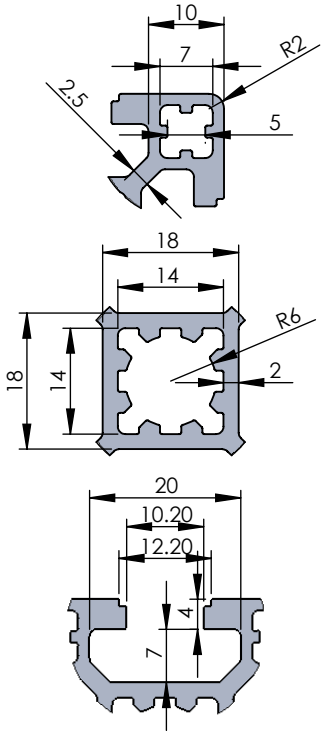

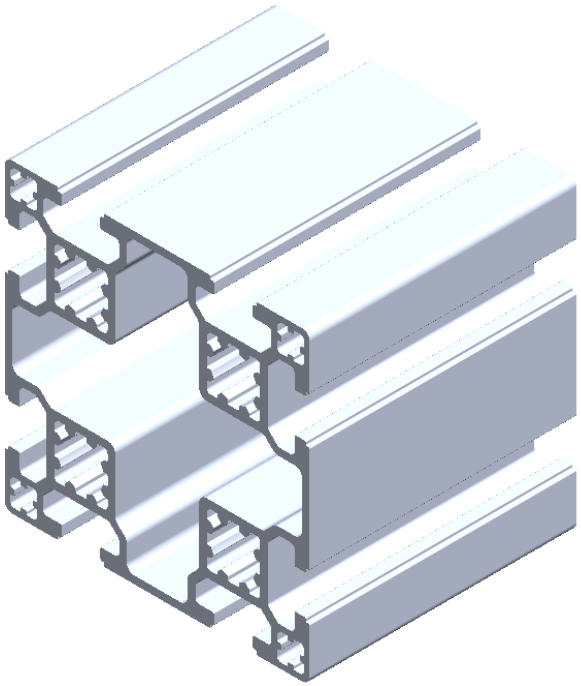

Profile group	40 Series	**Material**	Aluminium alloy	**Moment of inertia Lx**	109.90 cm^4
Part code	PG40 8080M	**Color**	Clear anodising	**Moment of inertia Ly**	109.90 cm^4
Description	PG40 80X80M with 8 slots	**Surface treatment**	15-17µm 300HX	**Moment of resistance Wx**	27.50 cm^3
				Moment of resistance Wy	27.50 cm^3
				Mass	4.13 kg/mtr

All Dimensions Are In mm

H2,Globe Complex,Anjur Road,Ovali Village,Bhiwandi,Thane-421 302.Maharashtra,INDIA

Email : info@sica.in
Web : www.sica.in
Tel:+91 8097048513

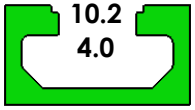

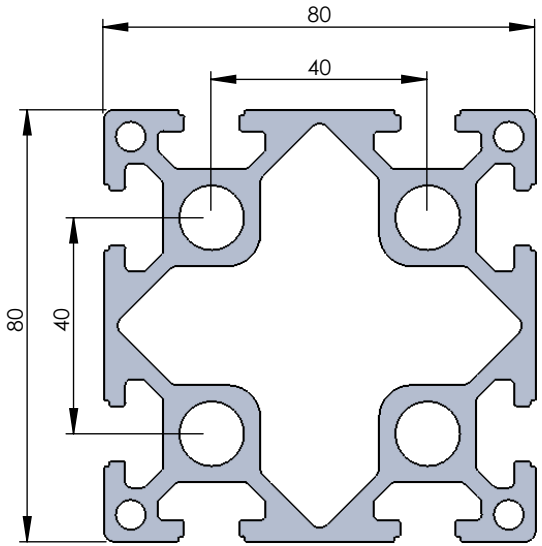

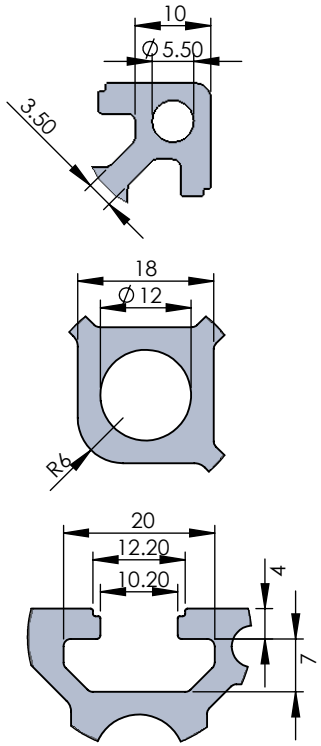

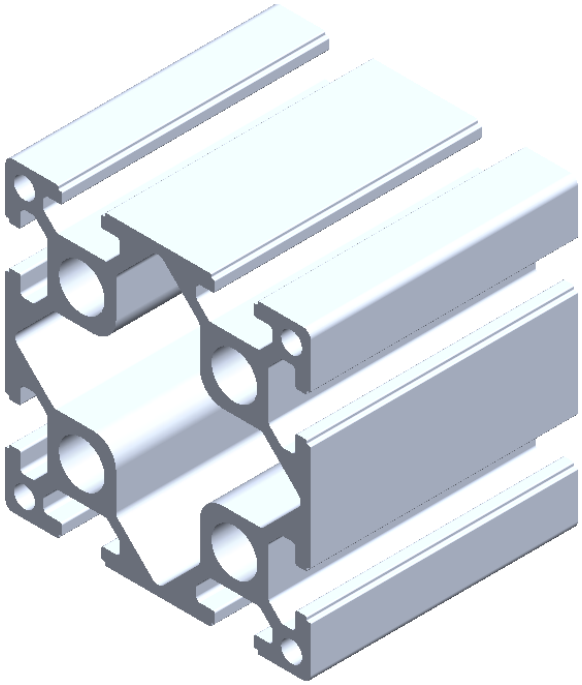

Profile group	40 Series	**Material**	Aluminium alloy	**Moment of inertia Lx**	148.20 cm^4
Part code	PG40 8080H	**Color**	Clear anodising	**Moment of inertia Ly**	148.20 cm^4
Description	PG40 80X80H with 8 slots	**Surface treatment**	15-17µm 300HX	**Moment of resistance Wx**	37.10 cm^3
				Moment of resistance Wy	37.10 cm^3
				Mass	5.57 kg/mtr

All Dimensions Are In mm

H2,Globe Complex,Anjur Road,Ovali Village,Bhiwandi,Thane-421 302.Maharashtra,INDIA

Email : info@sica.in
Web : www.sica.in
Tel:+91 8097048513

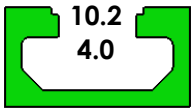

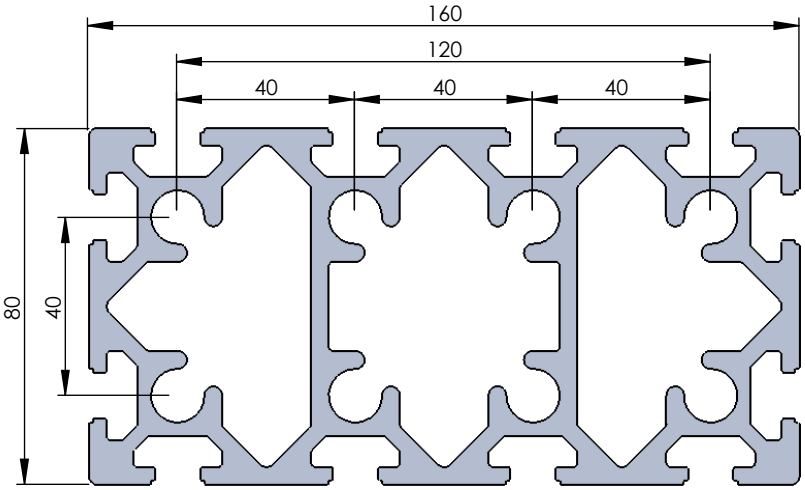

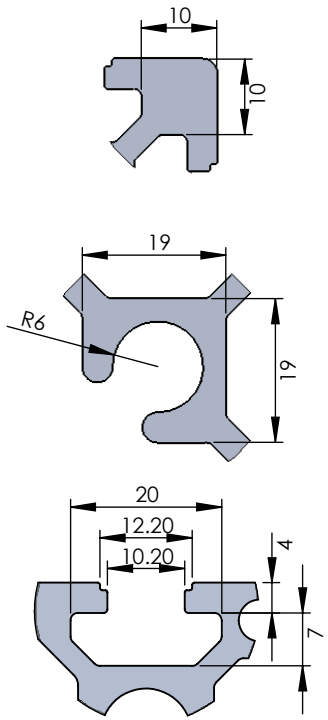

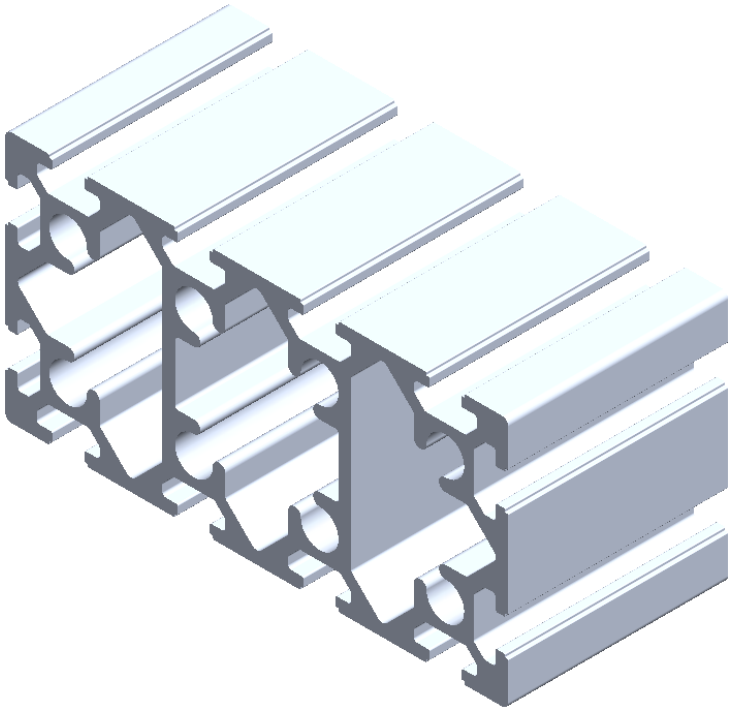

Profile group	40 Series	**Material**	Aluminium alloy	**Moment of inertia Lx**	287.50 cm^4
Part code	PG40 80160	**Color**	Clear anodising	**Moment of inertia Ly**	975.50 cm^4
Description	PG40 80X160 with 12 slots	**Surface treatment**	15-17µm 300HX	**Moment of resistance Wx**	71.90 cm^3
				Moment of resistance Wy	121.90 cm^3
				Mass	10.95 kg/mtr

All Dimensions Are In mm

H2,Globe Complex,Anjur Road,Ovali Village,Bhiwandi,Thane-421 302.Maharashtra,INDIA

Email : info@sica.in
Web : www.sica.in
Tel:+91 8097048513

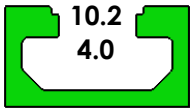

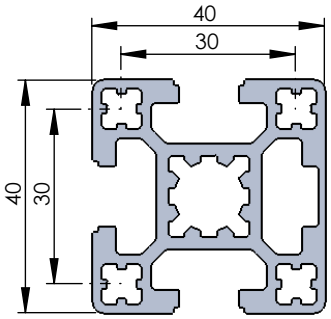

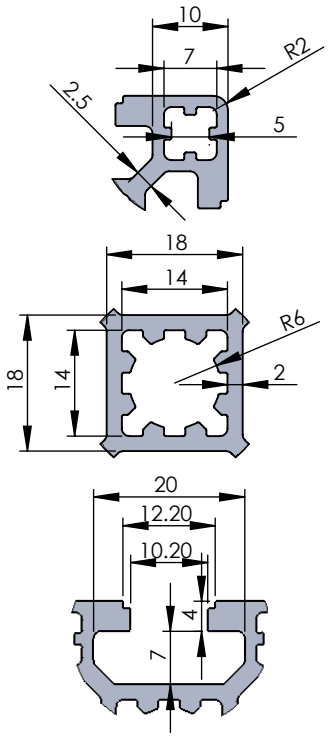

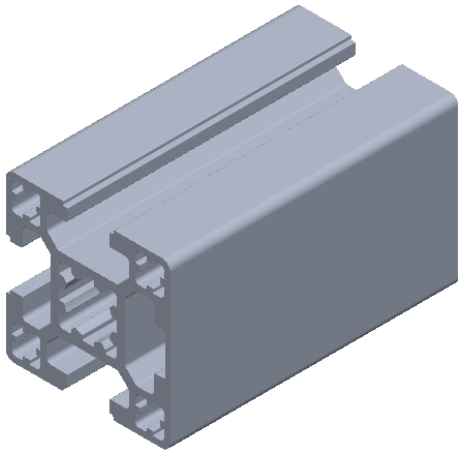

Profile group	40 Series	**Material**	Aluminium alloy	**Moment of inertia Lx**	9.20 cm^4
Part code	PG40 4040 OSC	**Color**	Clear anodising	**Moment of inertia Ly**	8.60 cm^4
Description	PG40 40X40 One side closed	**Surface treatment**	15-17µm 300HX	**Moment of resistance Wx**	4.50 cm^3
				Moment of resistance Wy	4.30 cm^3
				Mass	1.57 kg/mtr

All Dimensions Are In mm

H2,Globe Complex,Anjur Road,Ovali Village,Bhiwandi,Thane-421 302.Maharashtra,INDIA

Email : info@sica.in
Web : www.sica.in
Tel:+91 8097048513

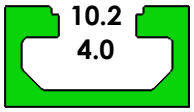

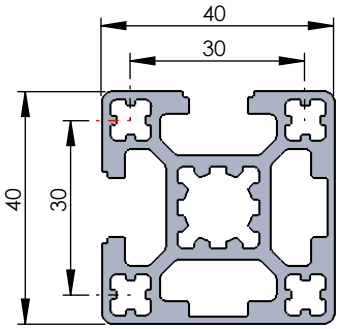

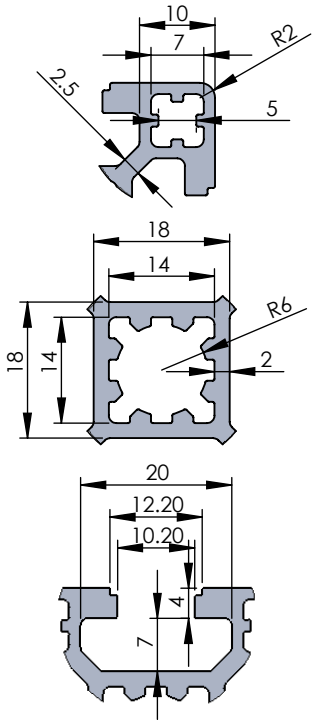

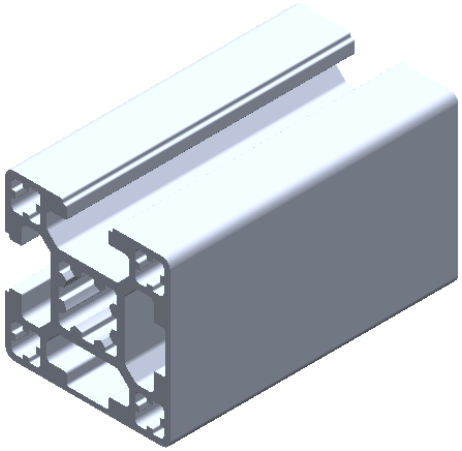

Profile group	40 Series	**Material**	Aluminium alloy	**Moment of inertia Lx**	10.10 cm^4
Part code	PG40 4040 2SSC	**Color**	Clear anodising	**Moment of inertia Ly**	09.60 cm^4
Description	PG40 40X40 Two adjacent side closed	**Surface treatment**	15-17µm 300HX	**Moment of resistance Wx**	04.50 cm^3
				Moment of resistance Wy	04.50 cm^3
				Mass	1.61 kg/mtr

All Dimensions Are In mm

H2,Globe Complex,Anjur Road,Ovali Village,Bhiwandi,Thane-421 302.Maharashtra,INDIA

Email : info@sica.in
Web : www.sica.in
Tel:+91 8097048513

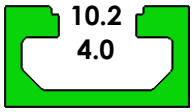

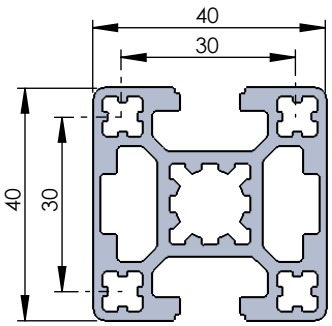

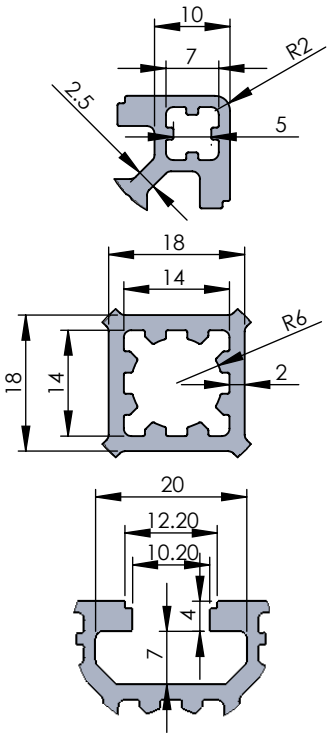

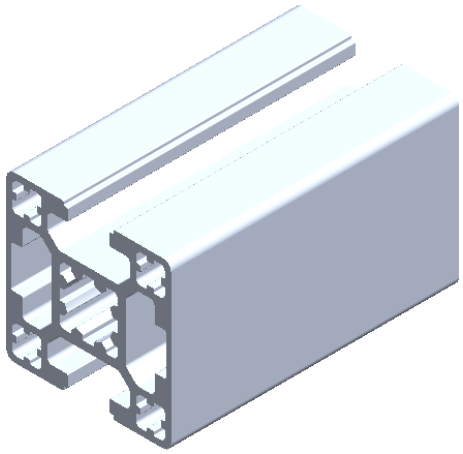

Profile group	40 Series	**Material**	Aluminium alloy	**Moment of inertia Lx**	10.10 cm^4
Part code	PG40 4040 2OSC	**Color**	Clear anodising	**Moment of inertia Ly**	08.60 cm^4
Description	PG40 40X40 Two opposite side closed	**Surface treatment**	15-17µm 300HX	**Moment of resistance Wx**	04.80 cm^3
				Moment of resistance Wy	04.30 cm^3
				Mass	1.61 kg/mtr

All Dimensions Are In mm

H2,Globe Complex,Anjur Road,Ovali Village,Bhiwandi,Thane-421 302.Maharashtra,INDIA

Email : info@sica.in
Web : www.sica.in
Tel:+91 8097048513

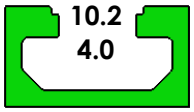

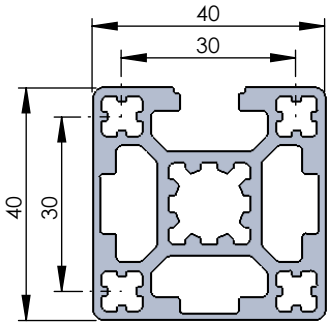

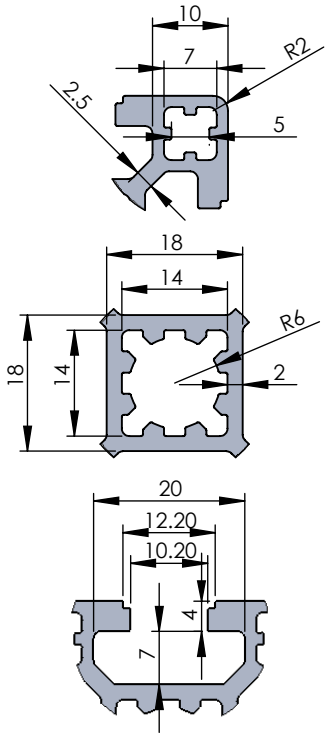

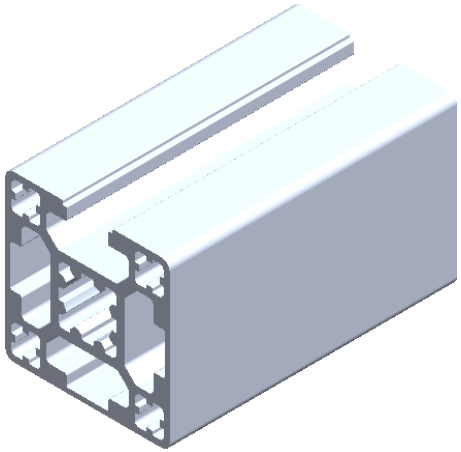

Profile group	40 Series	**Material**	Aluminium alloy	**Moment of inertia Lx**	10.50 cm^4
Part code	PG40 4040 3SC	**Color**	Clear anodising	**Moment of inertia Ly**	09.60 cm^4
Description	PG40 40X40 Three side closed	**Surface treatment**	15-17µm 300HX	**Moment of resistance Wx**	04.80 cm^3
				Moment of resistance Wy	04.50 cm^3
				Mass	1.65 kg/mtr

All Dimensions Are In mm

H2,Globe Complex,Anjur Road,Ovali Village,Bhiwandi,Thane-421 302.Maharashtra,INDIA

Email : info@sica.in
Web : www.sica.in
Tel:+91 8097048513

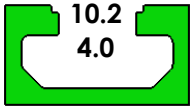

SICA

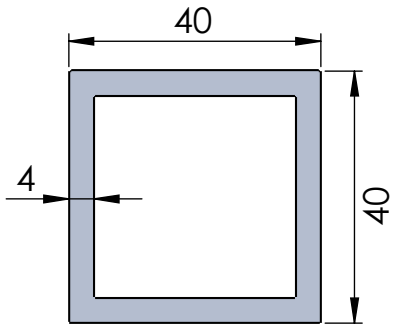

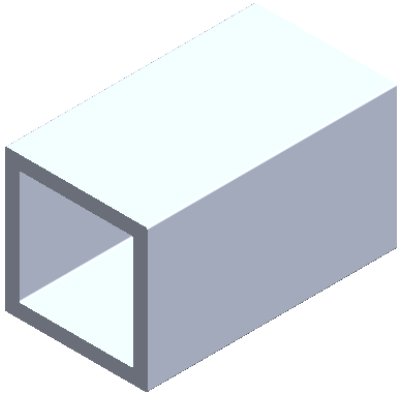

Profile group	40 Series	**Material**	Aluminium alloy	**Moment of inertia Lx**	7.30 cm^4
Part code	PG40 4040 Hollow	**Color**	Clear anodising	**Moment of inertia Ly**	7.03 cm^4
Description	PG40 40X40 Hollow	**Surface treatment**	15-17µm 300HX	**Moment of resistance Wx**	3.06 cm^3
				Moment of resistance Wy	3.06 cm^3
				Mass	1.55 kg/mtr

All Dimensions Are In mm

H2,Globe Complex,Anjur Road,Ovali Village,Bhiwandi,Thane-421 302.Maharashtra,INDIA

Email : info@sica.in
Web : www.sica.in
Tel:+91 8097048513

SICA

Profile 45 Range

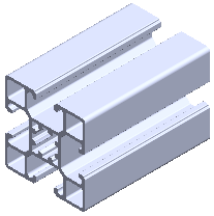

PG45 4545M

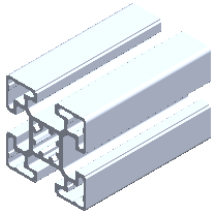

PG45 4545H

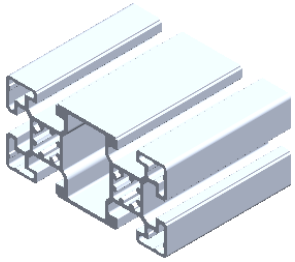

PG45 4590

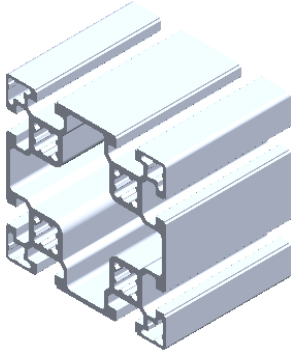

PG45 9090

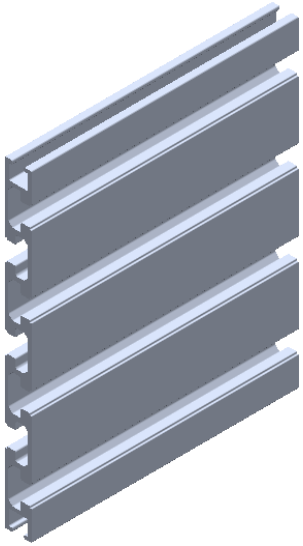

PG45 15180

H2,Globe Complex,Anjur Road,Ovali Village,Bhiwandi,Thane-421 302.Maharashtra,INDIA

Email : info@sica.in
Web : www.sica.in
Tel:+91 8097048513

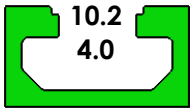

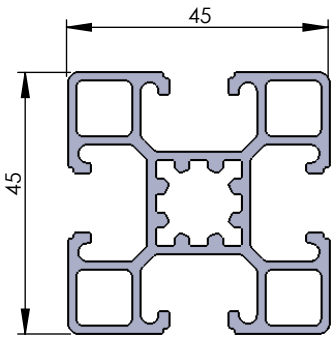

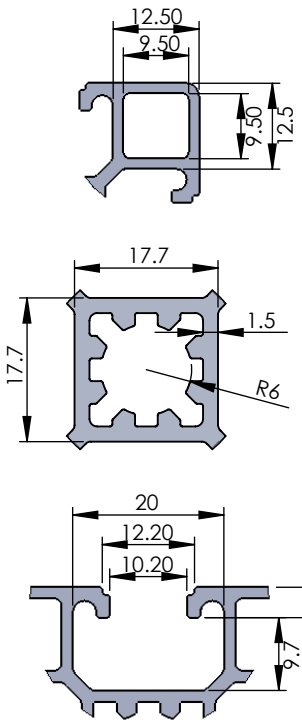

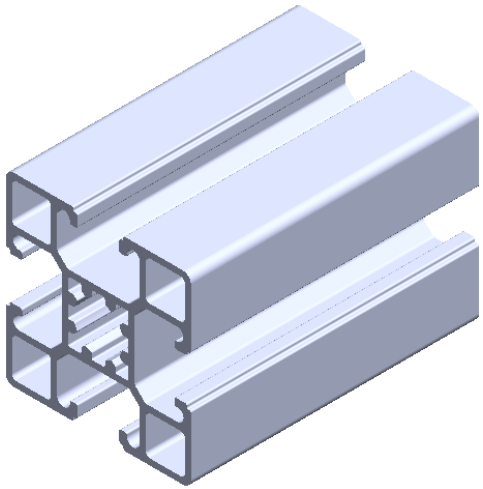

Profile group	45 Series	**Material**	Aluminium alloy	**Moment of inertia Lx**	11.65 cm^4
Part code	PG45 4545M	**Color**	Clear anodising	**Moment of inertia Ly**	11.65 cm^4
Description	PG45 45X45M with 4 slots	**Surface treatment**	15-17µm 300HX	**Moment of resistance Wx**	04.72 cm^3
				Moment of resistance Wy	04.72 cm^3
				Mass	1.41 kg/mtr

All Dimensions Are In mm

H2,Globe Complex,Anjur Road,Ovali Village,Bhiwandi,Thane-421 302.Maharashtra,INDIA

Email : info@sica.in
Web : www.sica.in
Tel:+91 8097048513

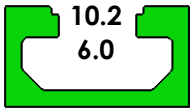

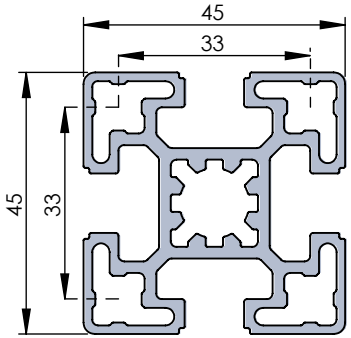

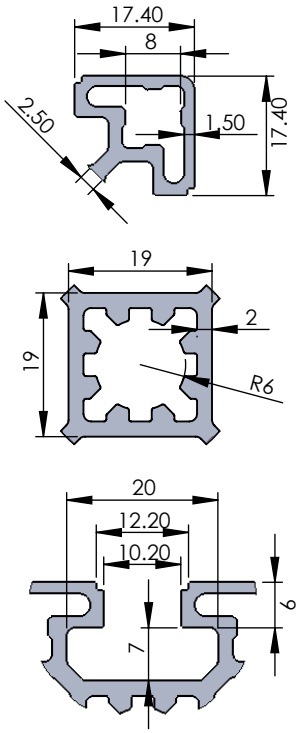

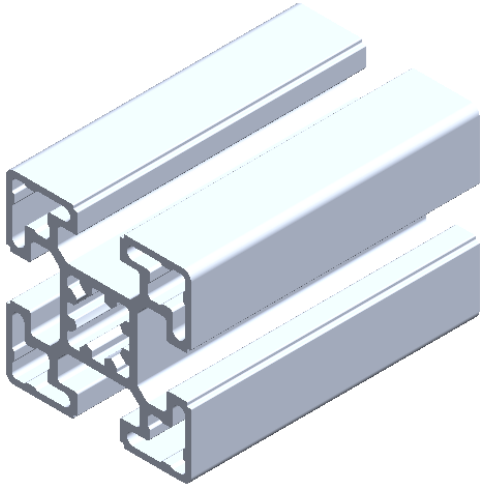

Profile group	45 Series	**Material**	Aluminium alloy	**Moment of inertia Lx**	12.10 cm^4
Part code	PG45 4545H	**Color**	Clear anodising	**Moment of inertia Ly**	12.10 cm^4
Description	PG45 45X45H with 4 slots	**Surface treatment**	15-17µm 300HX	**Moment of resistance Wx**	05.38 cm^3
				Moment of resistance Wy	05.38 cm^3
				Mass	1.71 kg/mtr

All Dimensions Are In mm

H2,Globe Complex,Anjur Road,Ovali Village,Bhiwandi,Thane-421 302.Maharashtra,INDIA

Email : info@sica.in
Web : www.sica.in
Tel:+91 8097048513

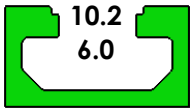

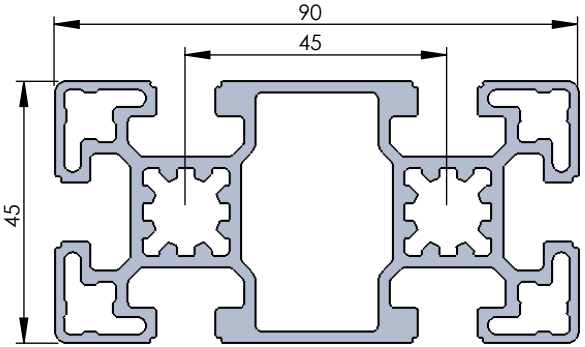

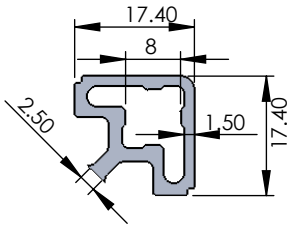

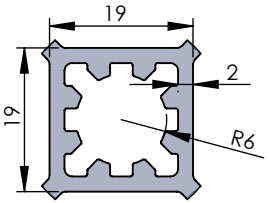

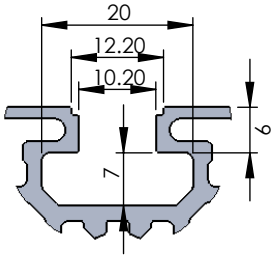

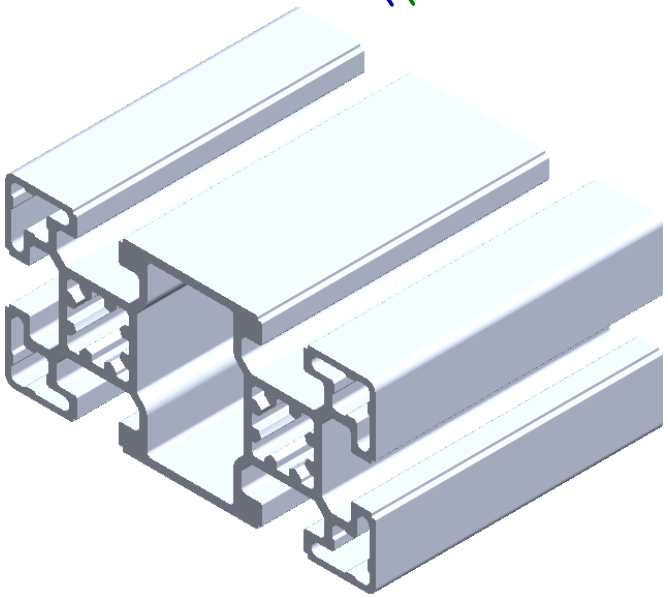

Profile group	45 Series	**Material**	Aluminium alloy	**Moment of inertia Lx**	24.19 cm^4
Part code	PG45 4590	**Color**	Clear anodising	**Moment of inertia Ly**	89.32 cm^4
Description	PG45 45X90 with 6 slots	**Surface treatment**	15-17µm 300HX	**Moment of resistance Wx**	10.75 cm^3
				Moment of resistance Wy	19.85 cm^3
				Mass	3.35 kg/mtr

All Dimensions Are In mm

H2,Globe Complex,Anjur Road,Ovali Village,Bhiwandi,Thane-421 302.Maharashtra,INDIA

Email : info@sica.in
Web : www.sica.in
Tel:+91 8097048513

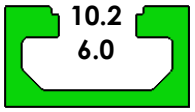

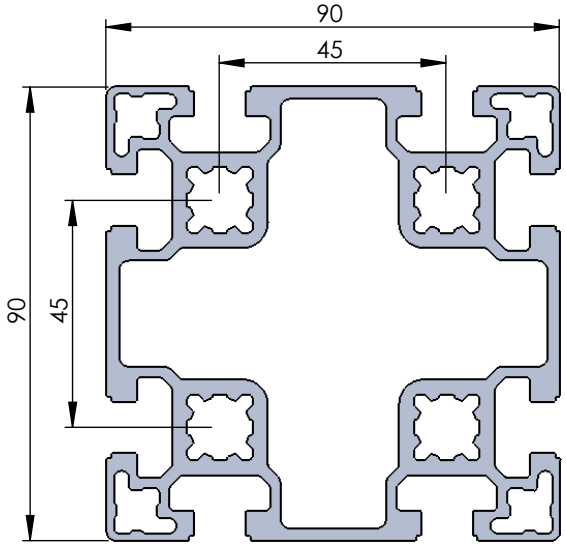

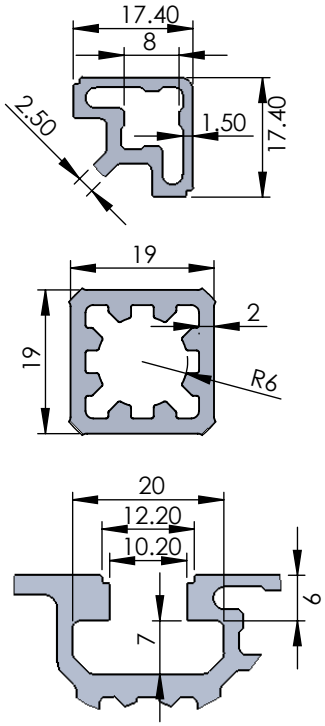

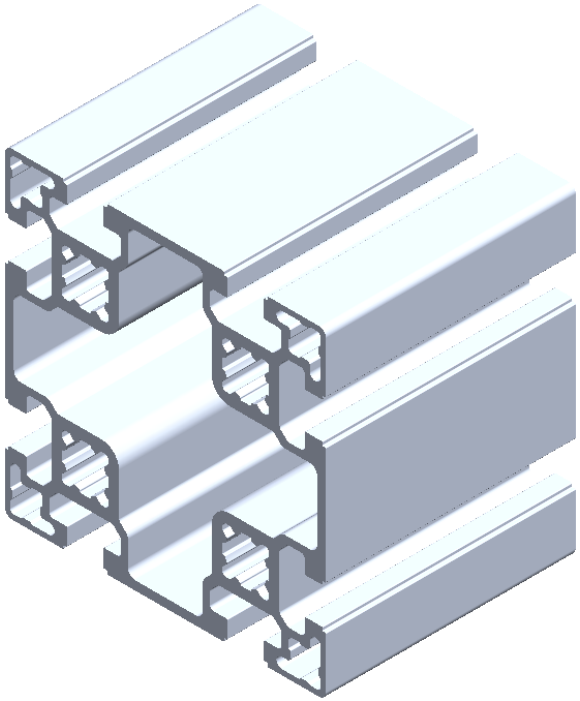

Profile group	45 Series	**Material**	Aluminium alloy	**Moment of inertia Lx**	16.32 cm^4
Part code	PG45 9090	**Color**	Clear anodising	**Moment of inertia Ly**	16.32 cm^4
Description	PG45 90X90 with 8 slots	**Surface treatment**	15-17µm 300HX	**Moment of resistance Wx**	36.27 cm^3
				Moment of resistance Wy	36.27 cm^3
				Mass	5.410 kg/mtr

All Dimensions Are In mm

H2,Globe Complex,Anjur Road,Ovali Village,Bhiwandi,Thane-421 302.Maharashtra,INDIA

Email : info@sica.in
Web : www.sica.in
Tel:+91 8097048513

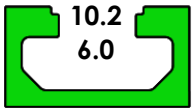

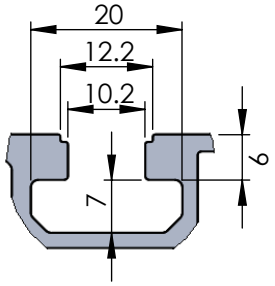

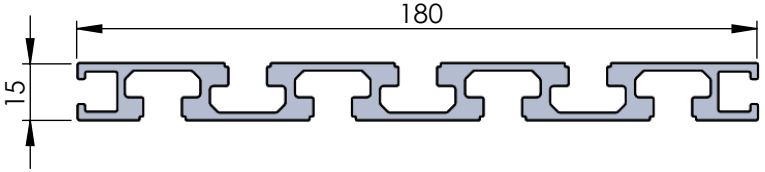

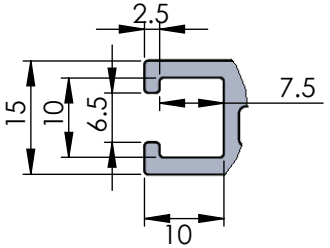

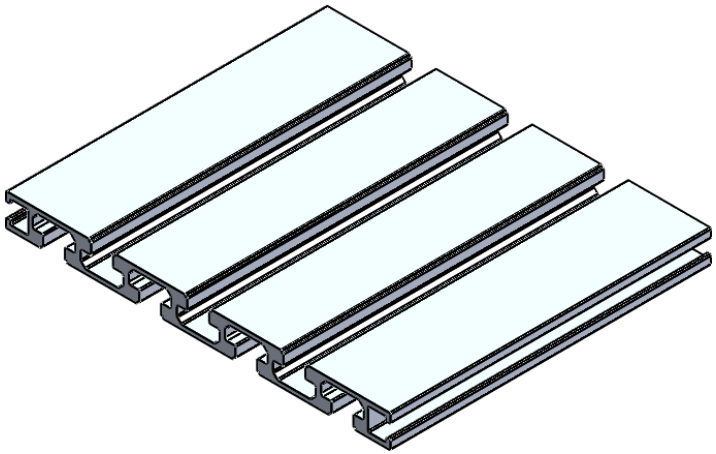

Profile group	45 Series	**Material**	Aluminium alloy
Part code	PG45 15180	**Color**	Clear anodising
Description	PG45 15X180 with 9 slots	**Surface treatment**	15-17µm 300HX
		Mass	3 kg/mtr

All Dimensions Are In mm

H2,Globe Complex,Anjur Road,Ovali Village,Bhiwandi,Thane-421 302.Maharashtra,INDIA

Email : info@sica.in
Web : www.sica.in
Tel:+91 8097048513

Profile 60 Range

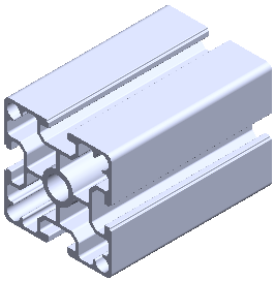

PG60 6060M

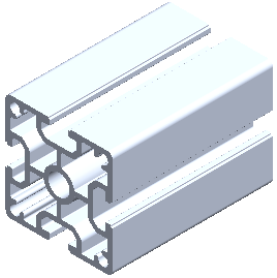

PG60 6060H

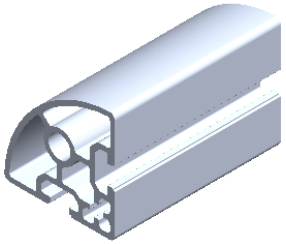

PG60 6060R90

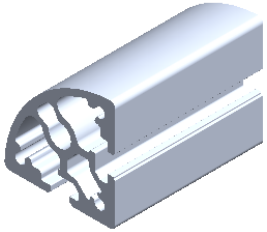

PG60 6060R90H

H2,Globe Complex,Anjur Road,Ovali Village,Bhiwandi,Thane-421 302.Maharashtra,INDIA

Email : info@sica.in
Web : www.sica.in
Tel:+91 8097048513

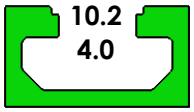

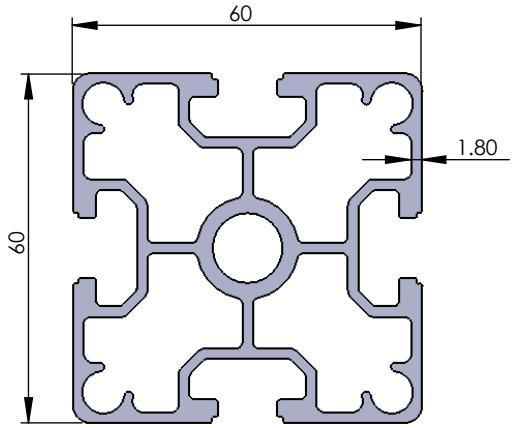

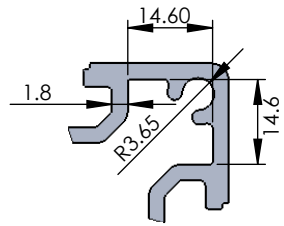

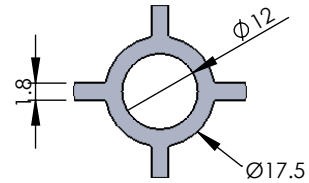

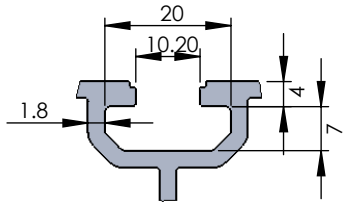

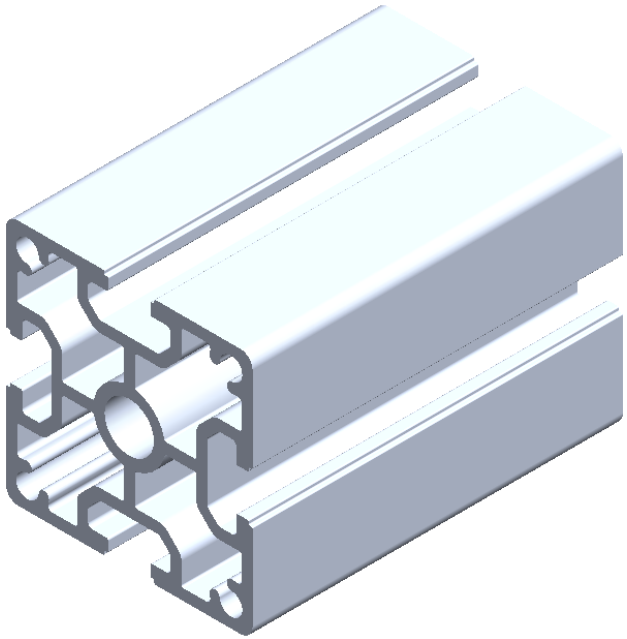

Profile group	60 Series	**Material**	Aluminium alloy	**Moment of inertia Lx**	32.40 cm^4
Part code	PG60 6060M	**Color**	Clear anodising	**Moment of inertia Ly**	32.40 cm^4
Description	PG60 60X60M with 4 slots	**Surface treatment**	15-17µm 300HX	**Moment of resistance Wx**	10.80 cm^3
				Moment of resistance Wy	10.80 cm^3
				Mass	2.57 kg/mtr

All Dimensions Are In mm

H2,Globe Complex,Anjur Road,Ovali Village,Bhiwandi,Thane-421 302.Maharashtra,INDIA

Email : info@sica.in
Web : www.sica.in
Tel:+91 8097048513

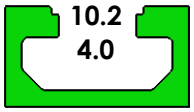

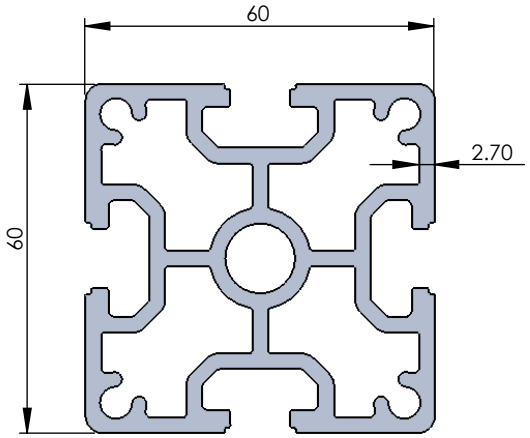

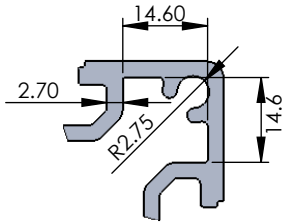

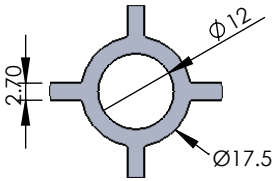

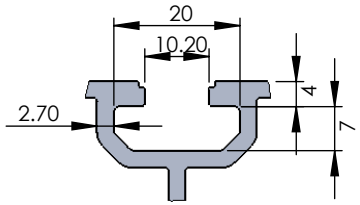

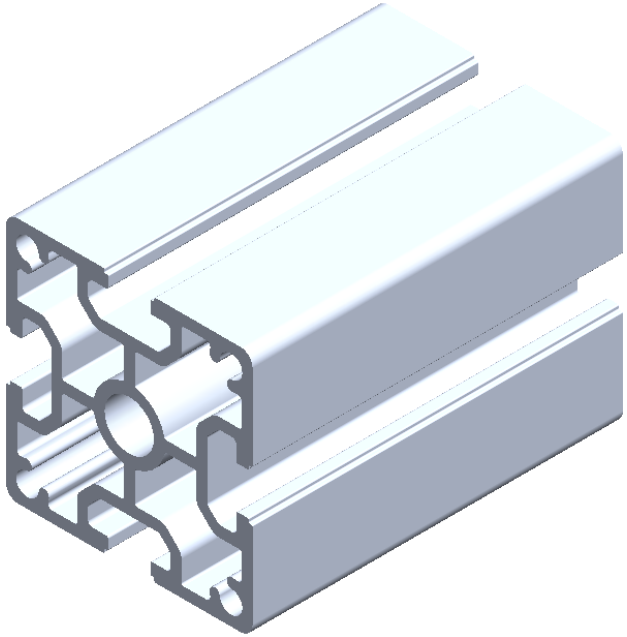

Profile group	60 Series	**Material**	Aluminium alloy	**Moment of inertia Lx**	47.70 cm^4
Part code	PG60 6060H	**Color**	Clear anodising	**Moment of inertia Ly**	47.70 cm^4
Description	PG60 60X60H with 4 slots	**Surface treatment**	15-17µm 300HX	**Moment of resistance Wx**	15.90 cm^3
				Moment of resistance Wy	15.90 cm^3
				Mass	3.33 kg/mtr

All Dimensions Are In mm

H2,Globe Complex,Anjur Road,Ovali Village,Bhiwandi,Thane-421 302.Maharashtra,INDIA

Email : info@sica.in
Web : www.sica.in
Tel:+91 8097048513

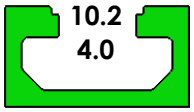

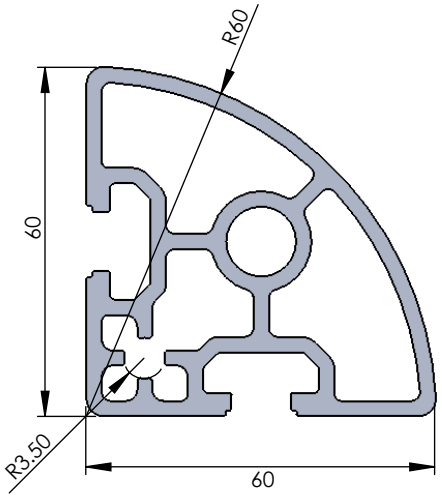

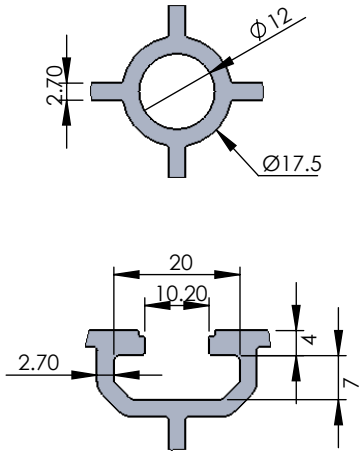

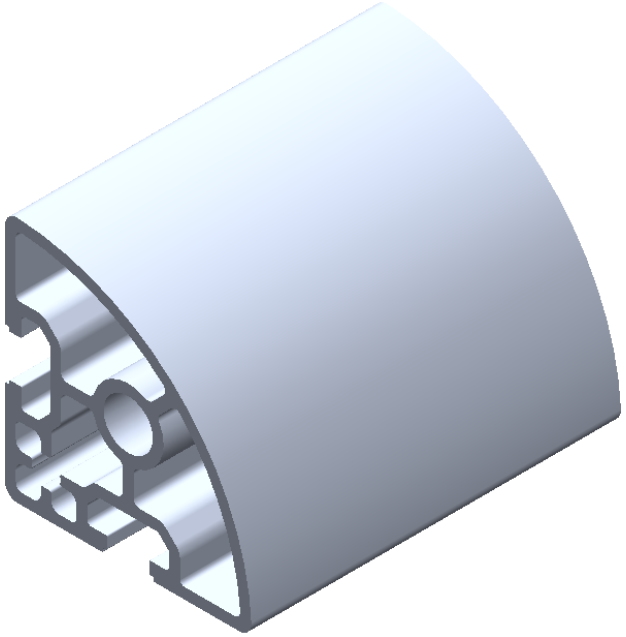

Profile group	60 Series
Part code	PG60 6060 R90
Description	PG60 60X60 R90

Material	Aluminium alloy
Color	Clear anodising
Surface treatment	15-17µm 300HX

Moment of inertia Lx	32.40 cm^4
Moment of inertia Ly	38.10 cm^4
Moment of resistance Wx	10.60 cm^3
Moment of resistance Wy	08.80 cm^3
Mass	2.53 kg/mtr

All Dimensions Are In mm

H2,Globe Complex,Anjur Road,Ovali Village,Bhiwandi,Thane-421 302.Maharashtra,INDIA

Email : info@sica.in
Web : www.sica.in
Tel:+91 8097048513

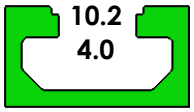

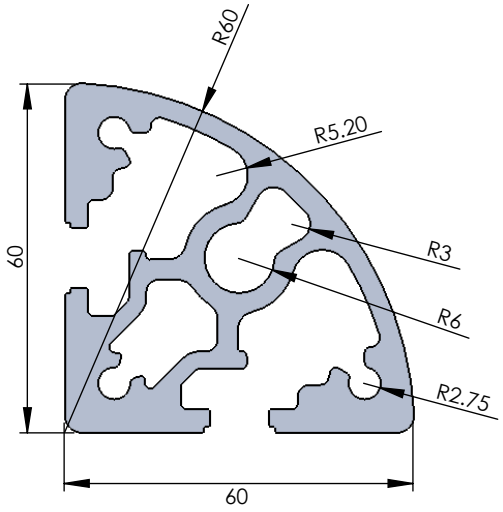

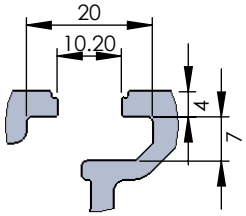

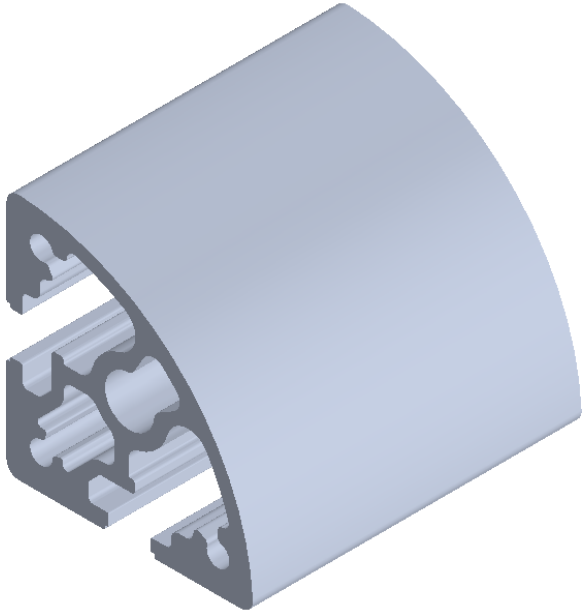

Profile group	60 Series	**Material**	Aluminium alloy	**Moment of inertia Lx**	51.10 cm^4
Part code	PG60 6060 R90H	**Color**	Clear anodising	**Moment of inertia Ly**	47.50 cm^4
Description	PG60 60X60 R90H	**Surface treatment**	15-17µm 300HX	**Moment of resistance Wx**	12.40 cm^3
				Moment of resistance Wy	13.60 cm^3
				Mass	3.46 kg/mtr

All Dimensions Are In mm

H2,Globe Complex,Anjur Road,Ovali Village,Bhiwandi,Thane-421 302.Maharashtra,INDIA

Email : info@sica.in
Web : www.sica.in
Tel:+91 8097048513

Other Group

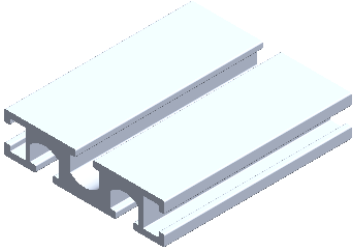

PG15 1560

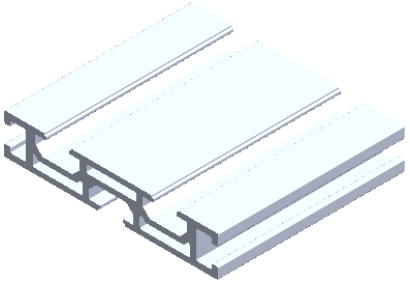

PG15 1580

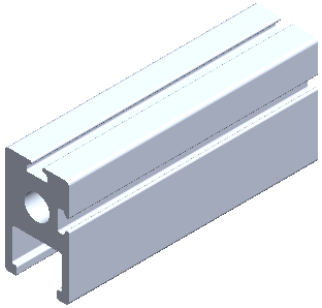

PG1830

H2,Globe Complex,Anjur Road,Ovali Village,Bhiwandi,Thane-421 302.Maharashtra,INDIA

Email : info@sica.in
Web : www.sica.in
Tel:+91 8097048513

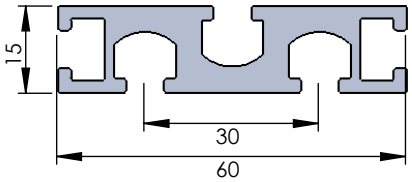

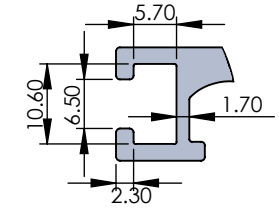

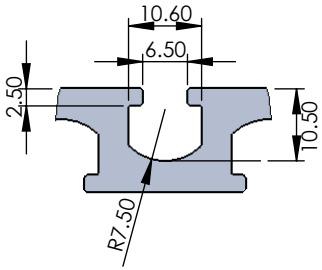

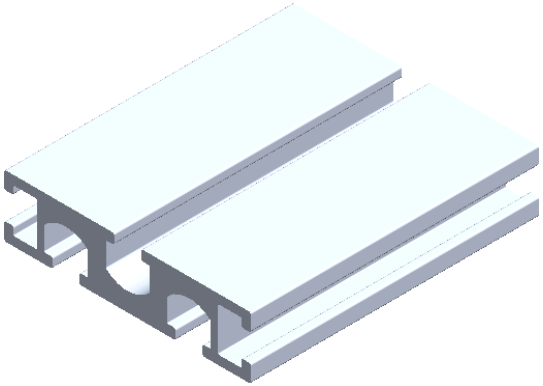

Profile group	15 Series	**Material**	Aluminium alloy	**Moment of inertia Lx**	2.75 cm^4
Part code	PG1560	**Color**	Clear anodising	**Moment of inertia Ly**	3.20 cm^4
Description	PG15x60 with 5 slots	**Surface treatment**	15-17µm 300HX	**Moment of resistance Wx**	1.10 cm^3
				Moment of resistance Wy	1.80 cm^3
				Mass	1.26 kg/mtr

All Dimensions Are In mm

H2,Globe Complex,Anjur Road,Ovali Village,Bhiwandi,Thane-421 302.Maharashtra,INDIA

Email : info@sica.in
Web : www.sica.in
Tel:+91 8097048513

This slots for 30 group nuts

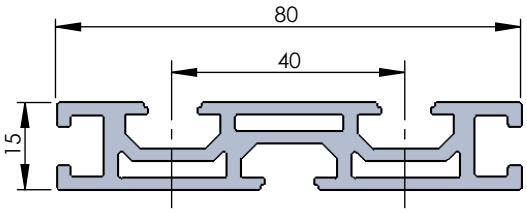

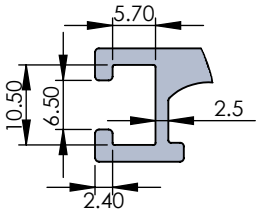

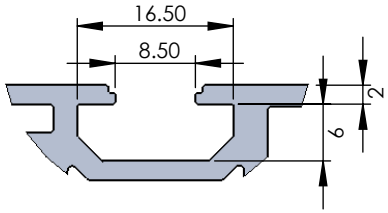

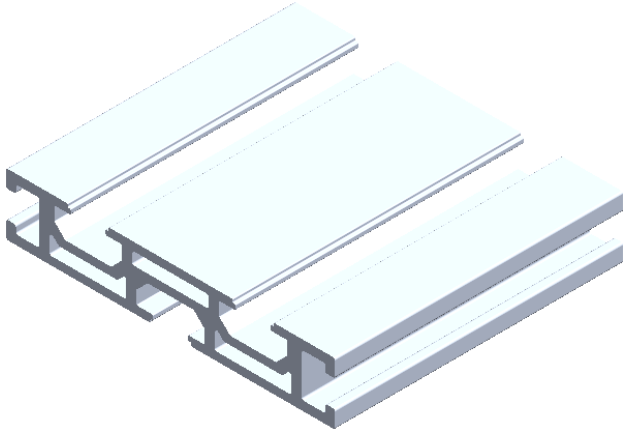

Profile group	15 Series	**Material**	Aluminium alloy	**Moment of inertia Lx**	3.52 cm^4
Part code	PG1580	**Color**	Clear anodising	**Moment of inertia Ly**	7.25 cm^4
Description	PG15x80 with 5 slots	**Surface treatment**	15-17µm 300HX	**Moment of resistance Wx**	1.90 cm^3
				Moment of resistance Wy	2.50 cm^3
				Mass	1.46 kg/mtr

All Dimensions Are In mm

H2,Globe Complex,Anjur Road,Ovali Village,Bhiwandi,Thane-421 302.Maharashtra,INDIA

Email : info@sica.in
Web : www.sica.in
Tel:+91 8097048513

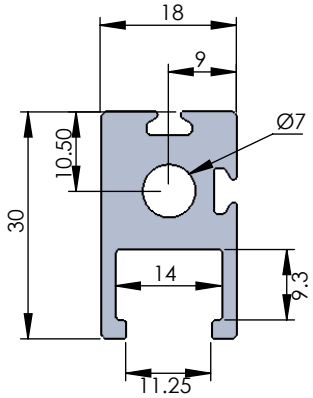

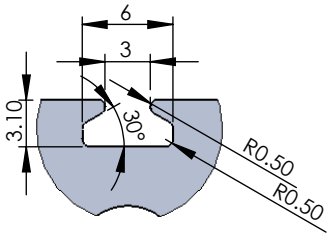

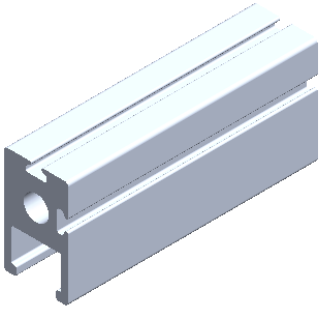

Profile group	Window	**Material**	Aluminium alloy	**Moment of inertia Lx**	----
Part code	PG1830	**Color**	Clear anodising	**Moment of inertia Ly**	----
Description	PG 18 x 30	**Surface treatment**	15-17µm 300HX	**Moment of resistance Wx**	----
				Moment of resistance Wy	----
				Mass	1.46 kg/mtr

All Dimensions Are In mm

H2,Globe Complex,Anjur Road,Ovali Village,Bhiwandi,Thane-421 302.Maharashtra,INDIA

Email : info@sica.in
Web : www.sica.in
Tel:+91 8097048513