Profile Group -	Base Stand
Part Code -	
Description -	Base Stand, 8888

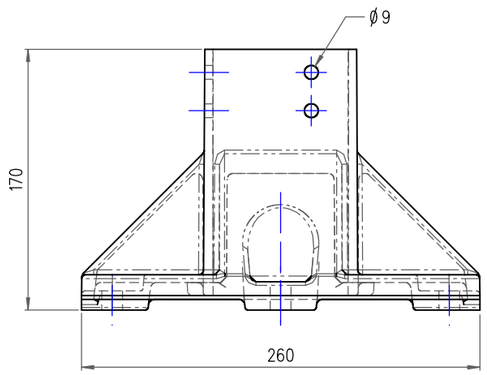

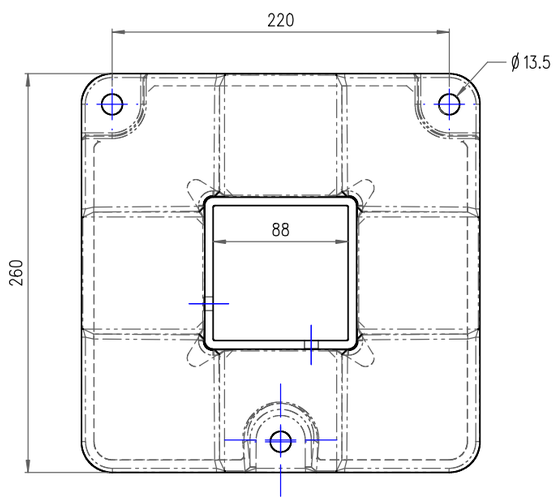

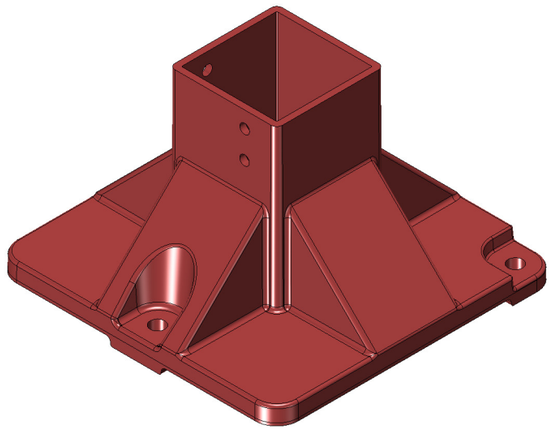

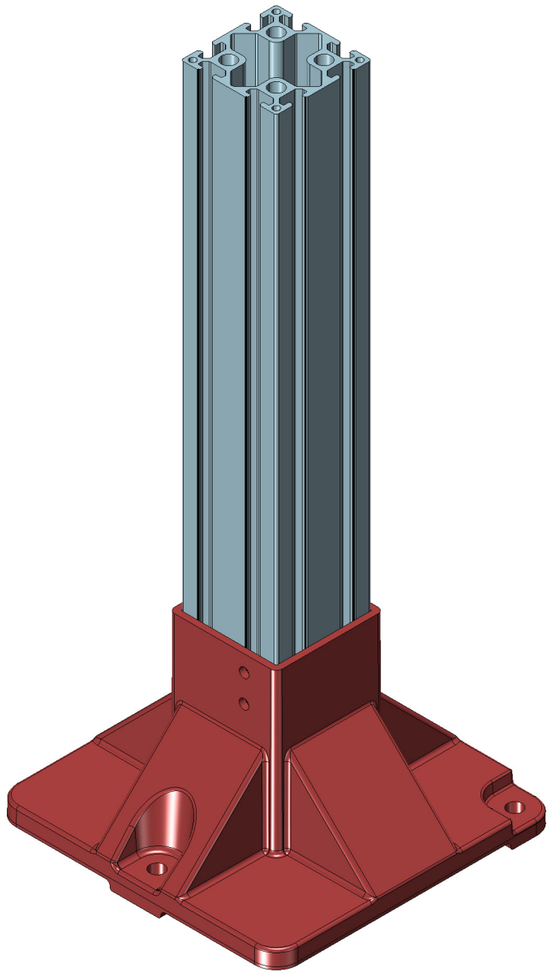

ALL DIMENSIONS ARE IN MM

SICA

SICA INDIA
www.sica.in

DATE	
DRAWN BY	
CHECKED BY	

PART NAME: Base Stand, 8888

DRG. NO.	MATERIAL
APPROX. WT.	REVISION

MODULAR ASSEMBLY SYSTEM	MODULAR CONVEYOR SYSTEM	ERGONIMIC WORKSTATION AND LEAN PRODUCTION SYSTEM	MACHINE GUARD AND ENCLOSURE SYSTEM	LINEAR MOTION SYSTEM	CLEAN ROOM SYSTEM

296.988 mm